# DRIERS
# XLM - XL

SPARE PARTS BOOK
PRICE LIST 2013


FP PEDROTTI ESSICCATOI

**FRATELLI PEDROTTI s.r.l.**

via Zanardelli 12/A 25030
**MAIRANO** BRESCIA - ITALY

Tel. 030 99 75 210 - 030 99 75 119
Fax. 030 99 75 220
e-Mail: info@pedrottisrl.it
internet: www.pedrottisrl.it

# INDEX OF TABLE

**YEAR** **2013**

## XLM - XL


| | |
|---|---|
| TAB.00 | QUICK CHECK MOST COMMON SPARE |
| TAB. 1 | FRAME PARTS |
| TAB. 1A | WINCHES FOR RETRACTABLE SCREEN |
| TAB. 1B | WINCHES FOR SPIRALS |
| TAB. 2 | TRANSMISSION TO CENTRE AUGER, TO THE FAN AND TO THE GENERATOR |
| TAB. 3 | FILLING AUGER |
| TAB. 4A | CENTRE AUGER |
| TAB. 4C | AGITATORS - INTERNAL GEAR - TRANSMISSION BOTTOM BY CHAIN |
| TAB. 5 | SPIRAL PIPE - (AGITATORS - For machines with inside chain only) |
| TAB. 6 | COMBUSTION CHAMBER - FAN UNIT |
| TAB.7 | ELECTRIC TRANSMISSION |
| TAB. 8 | GEARBOX |
| TAB.8A | LUBRICATION SYSTEM |
| TAB.8B | AUTOMATIC AND PERMANENT LUBRICATION SYSTEM |
| TAB.9A | GENERATORS ELECTRIC PANEL - THERMOSTATS - ELECTRICAL ITEM |
| TAB.9B | ELECTRIC PANEL (DRYERS MOD. ELECTRIC) |
| TAB.10A | "PEDROTTI" BURNER" 380 VOLTS |
| TAB. 10C | "PEDROTTI" BURNER TRIPLE STAGE |
| TAB. 11 | FUEL PLANT SYSTEM |
| TAB.12 | GENERATOR |
| TAB. 13 | DESACHARGING CHUTE - DUST-EXTRACTOR |
| TAB. 14 | DUST EXTRACTOR SYSTEM |
| TAB. 18 | GUARDS |
| TAB.19A | HYDRAULIC SYSTEM OPERATE CENTRE AUGER TOP SCREEN (mechanics parts) |
| TAB.19B | HYDRAULIC SYSTEM OPERATE CENTRE AUGER TOP SCREEN (electrics parts) |

| | QUICK CHECK MOST COMMON SPARES XLM-XL | XL-XLM | TAB. 00 |
|---|---|---|---|
| | | Sheet 1 of 3 | 2013 |

| POS. | DESCRIPTION | UM | Euro € |
|---|---|---|---|
| | -CENTRE AUGERS- | | |
| | | | |
| A | SPIRAL Ø 330x350x90 TK 12 mm | m | 122,28 |
| B | SPIRAL Ø 400x350x100 | m | 264,63 |
| | | | |
| | *A BOTTOM AUGER TAB.4A POS. 15 (1)* | | |
| 1 | XL L=4150 Tutto Riporto ø330x ø90 | N | 2.176,58 |
| 2 | XLJ L=4150 Tutto Riporto ø400x ø100 | N | 3.348,36 |
| 3 | XLM-XL L=4550 Tutto Riporto ø330x ø90 | N | 2.272,87 |
| 3A | XLM-XL L=4550 creusabro ø330x ø90 | N | 4.959,42 |
| 4 | XLMJ L=4550 Tutto Riporto ø400x ø100 | N | 3.426,46 |
| 5 | XL 550 L=4550 | N | 3.426,46 |
| 5A | XLM-XL L=4550 creusabro ø 330x ø100 | N | 5.419,85 |
| | *B - TOP AUGER STAND. DESIGN (1)* | | |
| | *TAB. 4A POS.24* | N | |
| 6 | XLM L=3230 | N | 1.299,35 |
| 7 | *XLM PLUS L=3730 ø330xø90* | N | 1.378,65 |
| | | | |
| | *C - TOP AUGER BUBBLE DESIGN (DUST-EXTRACTOR) (1)* | | |
| | *TAB.4A POS.34* | N | |
| 8 | XLM ø330xø90 L=3220 | N | 1.363,58 |
| 12 | XLM ø330xø90 L=3220 Creusabro | N | 4.164,87 |
| 9 | XL ø330xø90 L=3720 Tutto Riporto | N | 2.178,62 |
| 9A | XL ø330xø90 L=3720 Creusabro | N | 4.641,10 |
| 10 | XL ø330xø90 L=4620 Tutto Riporto | N | 2.362,60 |
| 11 | XLM ø330xø90 L=3220 Tutto Riporto | N | 1.917,46 |
| 13 | XL 550 ø400xø100 L=4250 Tutto Riporto | N | 3.146,33 |
| 14 | XLJ L=3720 Tutto Riporto ø400xø100 | N | 2.959,19 |
| 15 | XLJ L=4620 Tutto Riporto ø400xø100 | N | 3.255,37 |
| 16 | XLMJ L=3220 Tutto Riporto ø400xø100 | N | 2.794,65 |
| 16A | XLJ L=3720 Creusabro o ø400xø100 | N | 4.768,74 |
| (1) | *Over price of augers modified for transport* | N | 311,09 |
| | | | |
| | | | |
| | | | |
| | -TUBES FOR CENTRE AUGER- | | |
| | *A - BOTTOM TUBES TAB. 5 POS. 24 (Thickness 4 mm) (2)* | | |
| 17 | XL ø360 L=3500 | N | 1.543,80 |
| 18 | XLM ø360 L=3900 | N | 1.685,31 |
| 19 | XLJ ø450 L=3500 | N | 1.811,24 |
| 20 | XLMJ ø450 L=3900 | N | 1.978,37 |
| 21 | XL 550 ø450 L=3900 | N | 1.978,37 |
| | | | |
| | | | |
| | *B - TOP TUBES STANDARD DESIGN TAB. 13 POS. 5B (Thickness 4 mm) (2)* | | |
| 22 | XLM L=3150 PAINT | N | 1.044,94 |
| 22A | XLM L=3150 ZINC-PLATED | N | 1.381,14 |
| 23 | XLM PLUS ø360 L=3650 paint | N | 1.167,16 |
| 23A | XLM PLUS ø360 L=3650 ZINC-PLATED | N | 1.555,21 |
| 24 | XLMJ ø450 L=3150 paint | N | 1.689,76 |
| 25 | XLMJ PLUS ø450 L=3650 paint | N | 1.849,96 |

| POS. | DESCRIPTION | UM | Euro € |
|---|---|---|---|
| | *C - TOP TUBES BUBBLE DESIGN (DUST EXTRACTOR) (Thickness 4 mm) (2)* | | |
| | *C/W ROTATING UNLOADING CHUTE TAV.13 Pos.5A* | | |
| 26 | XLM ø360 L=3150 paint | N | 1.198,02 |
| 26A | XLM ø360 L=3150 ZINC-PLATED | N | 1.516,19 |
| 27 | XL ø360 L=3450 paint | N | 1.325,53 |
| 27B | XL ø360 L=3450 ZINC-PLATED | N | 1.625,14 |
| 28 | XLM PLUS ø360 L=3650 paint | N | 1.375,18 |
| 28A | XLM PLUS ø360 L=3650 ZINC-PLATED | N | 1.694,02 |
| 29 | XLMJ ø450 L=3150 paint | N | 1.730,08 |
| 30 | XLJ ø450 L=3450 paint | N | 1.832,80 |
| 31 | XL 550 ø450 L=3930 paint | N | 2.002,85 |
| | | | |
| (2) | *Over price of tubes modified for transport* | N | 148,26 |
| | | | |
| | *D - TOP TUBES BUBBLE DESIGN (DUST EXTRACTOR) (Thickness 4 mm) (3)* | | |
| | *C/W FIX UNLOADING CHUTE TAV.13 Pos. 5C* | | |
| 32 | TOP TUBE FIX CHUTE L=2900-3700 mm paint | N | 1.232,40 |
| 33 | TOP TUBE FIX CHUTE L=3700-4100 mm vern. | N | 1.320,31 |
| | | | |
| (3) | *Overprice of galvanized top tubes with fix unloading chute (price fo 1 mt.)* | m | 109,72 |
| | | | |
| | -BASIC BEARINGS COMPLET AND ASSEMBLED- | | |
| | | | |
| | *A - BOTTOM BEARING TAB.4A POS. 8-9-10-11* | | |
| 34 | XL-XLM ø 360 BEARINGS TOP QUALITY | N | 764,13 |
| 35 | XL 550 - XLJ - XLMJ ø 450 BEARINGS TOP QUALITY | N | 1.266,69 |
| | | | |
| | | | |
| | | | |
| | *B - INTERMEDIATE CROSS BEARING TAB. 4A POS.18-19-20-21-22* | | |
| | | | |
| 36 | XL - XLM ø360 BEARING TOP QUALITY | N | 221,67 |
| 37 | XL 550 - XLJ - XLMJ ø450 BEARING TOP QUALITY | N | 268,52 |
| | | | |
| | | | |
| | | | |
| | | | |
| | | | |
| | | | |
| | *D - TOP BEARING FOR BUBBLE AUGERS (DUST EXTRACT) TAB.4A POS.36-37-38-39-22* | | |
| | | | |
| 38 | XL - XLM ø360 BEARINGS TOP QUALITY | N | 394,58 |
| 39 | XL 550 - XLJ - XLMJ ø450 BEARINGS TOP QUALITY | N | 423,78 |
| | | | |
| | | | |
| | | | |
| | | | |
| | | | |
| | | | |
| | | | |
| | | | |

| | QUICK CHECK MOST COMMON SPARES XLM-XL | XL-XLM | TAB. 00 |
|---|---|---|---|
| | | Sheet 3 of 3 | 2013 |

| POS. | DESCRIPTION | UM | Euro € |
|---|---|---|---|
| | -SHAFTS- | | |
| | *A - AGITATORS DRIVING SHAFT TAB. 4B - (4C) POS. 4 - (5)* | | |
| 40 | XLM - XL Ø 35 L=1605 | N | 158,27 |
| 41 | XLJ-XLMJ Ø35 L=1630 | N | 160,19 |
| 42 | XL 550 Maize Ø 35 L=1755 | N | 175,18 |
| 43 | XL 550 Rice Ø 35 L=1705 | N | 171,99 |
| | *B - FAN SHAFT TAB. 2 POS. 43* | | |
| 44 | XLM - XLMJ -XL - XLJ FOR PULLEY 4 RACES | N | 888,34 |
| 45 | XLM - XLMJ -XL - XLJ FOR PULLEY 10 RACES | N | 954,83 |
| | -TOP PVC COVER- | | |
| 46 | TOP PVC COVER FOR 400 | N | 891,99 |
| 47 | TOP PVC COVER FOR 450 | N | 1.148,73 |
| 48 | CLIP FOR TOP COVER | N | 3,89 |
| | - PAINTS - | | |
| 49 | RED PAINT "Pedrotti" | Kg | 29,93 |
| 50 | YELLOW PAINT "Pedrotti" | Kg | 21,84 |
| 51 | CATALYZER | Kg | 47,45 |
| 52 | ANTI-RUST PAINT | Kg | 9,61 |

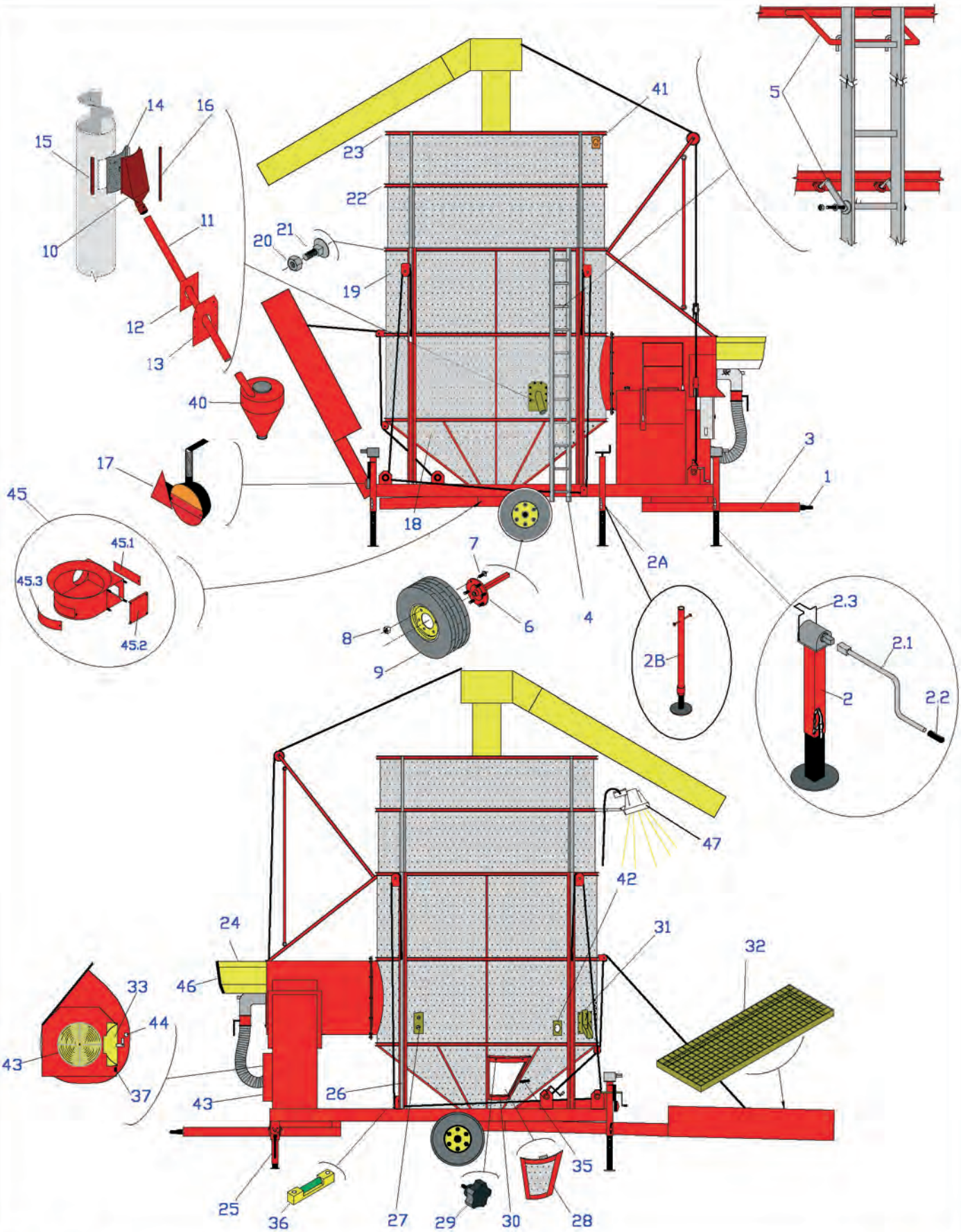


FP PEDROTTI ESSICCATOI

# FRAME PARTS

TAB. 1
2007

| | FRAME PARTS<br>LARGE CAPACITY MACHINES | XL-XLM<br>Sheet 1 of 2 | TAB. 1<br>2013 |
|---|---|---|---|

| POS. | DESCRIPTION | UM | Euro € |
|---|---|---|---|
| 1 | DRAWBAR EYE | N | 74,53 |
| 2 | STANDING ADJUSTABLE JACK FRONT LEVER | N | 274,85 |
| 2.1 | LEVER | N | 26,46 |
| 2.2 | PLASTIC HANDLE | N | 7,34 |
| 2.3 | SAFETY CLIP | N | 14,09 |
| 2A | STANDING ADJUSTABLE JACK | N | 173,38 |
| 2B | STANDING ADJUSTABLE | N | 104,17 |
| 3 | DRAWBAR | N | 621,38 |
| 4A | ALLUMINIUM LADDER | N | 229,95 |
| 4B | STEEL LADDER WITH N° 5 STEPS | m | 109,42 |
| 5 | ITEM FIXING OF ALLUMINIUM LADDER | N | 88,07 |
| 6 | SEMI AXLE | N | 153,67 |
| 7 | THREADED SCREW M 18X1.5 | N | 3,94 |
| 8 | WHEEL NUT M 18X1.5 | N | 1,39 |
| 9 | WHEEL 10,0/75 - 15,3 | N | 368,65 |
| 10 | TOP BOX Ø 450 FOR GRAVITY CLEANER | N | 274,56 |
| 11 | GRAVITY CLEANER PIPE FOR XLM | N | 61,94 |
| 12 | INNER FIXING PLATE | N | 12,80 |
| 13 | OUTER FIXING PLATE | N | 20,62 |
| 14A | BLIND SCREEN FOR CLEANER | N | 34,27 |
| 14B | SCREEN FOR CLEANER HOLE Ø 3 TOP BOX Ø 450 | N | 52,54 |
| 14C | SCREEN FOR CLEANER HOLE Ø 4 TOP BOX Ø 450 | N | 52,54 |
| 14D | SCREEN FOR CLEANER HOLE Ø 5 TOP BOX Ø 450 | N | 52,54 |
| 15 | BRACKET | N | 29,79 |
| 16 | BRACKET | N | 35,44 |
| 17 | BACK ROAD LIGHTS KIT | N | 184,87 |
| 18A | BLIND BOTTOM SECTION | N | 49,62 |
| 18B | TRIANGULAR BOTTOM SCREEN ø 1,5 mm | N | 78,21 |
| 18C | TRIANGULAR BOTTOM SCREEN ø 2,5 mm | N | 68,98 |
| 18D | 2nd LEVEL TRIANG. BOTTOM BLIND SCREEN mm | N | 62,69 |
| 18E | 2nd LEVEL TRIANGULAR BOTTOM SCREEN ø1,5 mm | N | 88,50 |
| 18F | 2nd LEVEL TRIANGULAR BOTTOM SCREEN ø2,5 mm | N | 77,89 |
| 18G | 3rd LEVEL TRIANG. BOTTOM BLIND SCREEN mm for XL 550 | N | 62,69 |
| 18H | 3rd LEVEL TRIANGULAR BOTTOM SCREEN ø1,5 mm for XL 550 | N | 88,50 |
| 18I | 3rd LEVEL TRIANGULAR BOTTOM SCREEN ø2,5 mm for XL 550 | N | 77,89 |
| 19A | PERFORATED SCREEN INOX AISI 430 Ø 1,5 | m² | 66,17 |
| 19B | PERFORATED SCREEN INOX AISI 430 Ø 2,5 | m² | 58,03 |
| 20 | INOX STEEL NUT M8 | N | 0,26 |
| 21 | INOX STEEL SCREW M8X20 FOR SCREEN FIXING | N | 0,47 |
| 22-23 | RING "U" SHAPE FOR RETRACTABLE SCREEN | N | 355,29 |
| 24 | BURNER COVER | N | 183,75 |
| 25 | FRONT TILTING SUPPORTING JACK | N | 251,12 |
| 26 | CHANNEL "C" SHAPE FOR SLIDING RODS | N | 183,78 |
| 27 | FIXING BRACKET FOR PROBES GAUGES | N | 90,91 |
| 28A | COMPLET INSPECTION DOOR SOLID SCREEN | N | 173,62 |
| 28B | COMPLET INSPECTION DOOR SCREEN ø 1,5 mm | N | 198,91 |
| 28C | COMPLET INSPECTION DOOR SCREEN ø 2,5 mm | N | 190,14 |
| | | | |
| | | | |
| | | | |
| | | | |

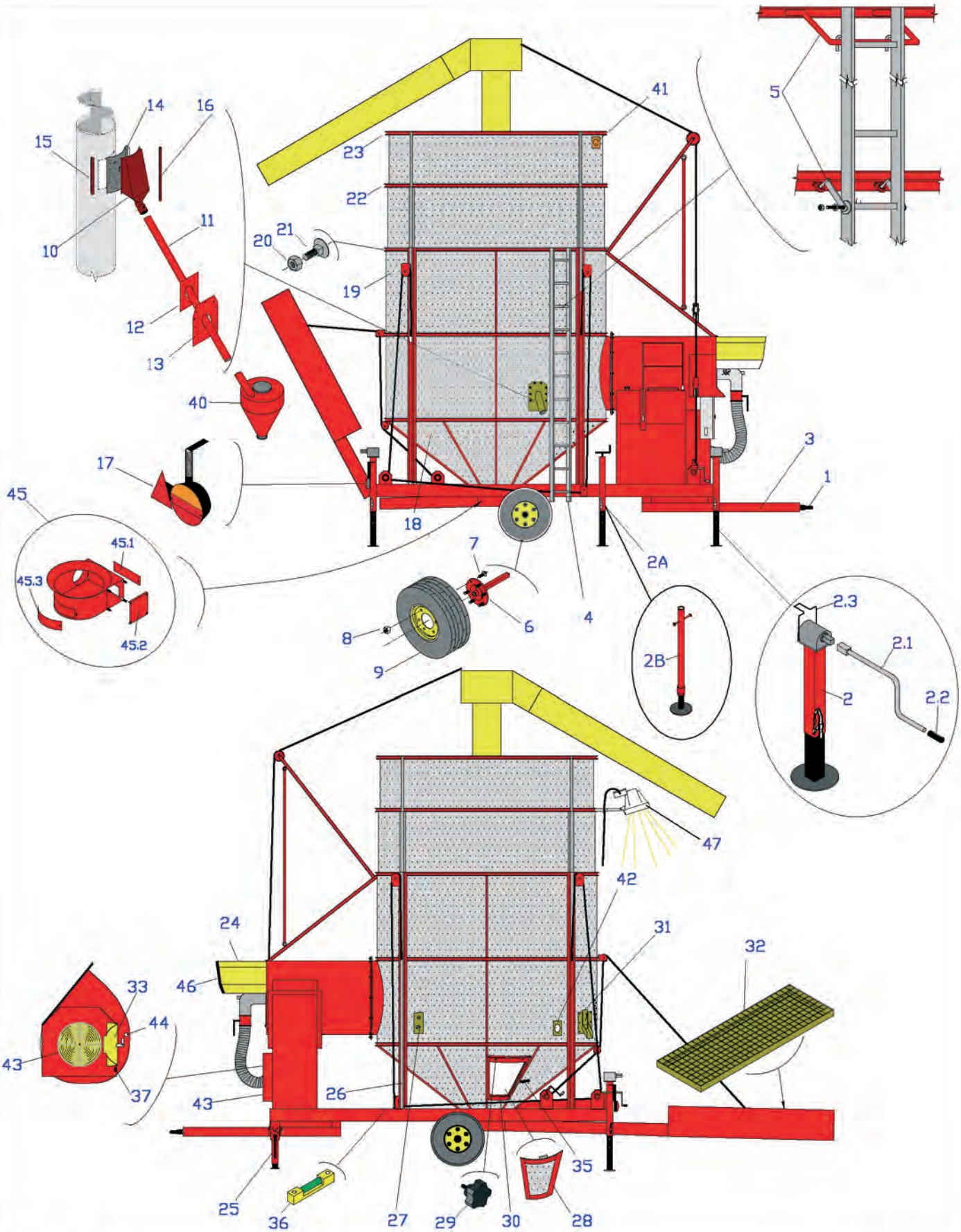


FP PEDROTTI ESSICCATOI

# FRAME PARTS

TAB. 1
2007

| POS. | DESCRIPTION | UM | Euro € |
|---|---|---|---|
| | | | |
| | | | |
| 29 | HANDLE M10 | N | 5,66 |
| 30 | FRAME INSPECTION DOOR | N | 180,39 |
| 31 | SAMPLE OUTLET | N | 67,67 |
| 33 | FAN COVER BEGINING 1998 | N | 244,32 |
| 35 | DOOR SAFETY SWITCH | N | 64,09 |
| 36 | LEVEL BUBBLE | N | 5,36 |
| 37 | FAN COVER SAFETY SWITCH | N | 41,74 |
| 40 | DUST CYCLONE Ø 300 | N | 276,77 |
| 41A | PAD SWITCH (DIAPHRAM TYPE) | N | 251,12 |
| 41A.1 | DIAPHRAM FOR PAD SWITCH | N | 87,78 |
| 41B | PAD SWITCH (PROPELLER TYPE) | N | 501,88 |
| 42 | CONVEYNG PIPE FOR GREASING | N | 56,23 |
| 44 | WHITE OR ORANGE REFLECTOR | N | 5,15 |
| 45A | INOX COMPLETE BOTTOM CASE FOR LOADING PIPE Ø 250 TYPE 600 | N | 1.011,05 |
| 45B | INOX COMPLETE BOTTOM CASE FOR LOADING PIPE Ø 250 TYPE 660 | N | 1.242,83 |
| 45.1 | INOX COVER PLATE | N | 38,52 |
| 45.2 | INOX BEARING COVER | m | 38,52 |
| 45.3 | INOX CURVED COVER | N | 38,52 |
| 46 | PROTECTING SHEATH FOR BURNER COVER | N | 9,67 |
| 47A | LIGHT SPOT | N | 120,45 |
| 47B | HALOGEN LAMP 55W FOR LIGHT SPOT | | 7,30 |

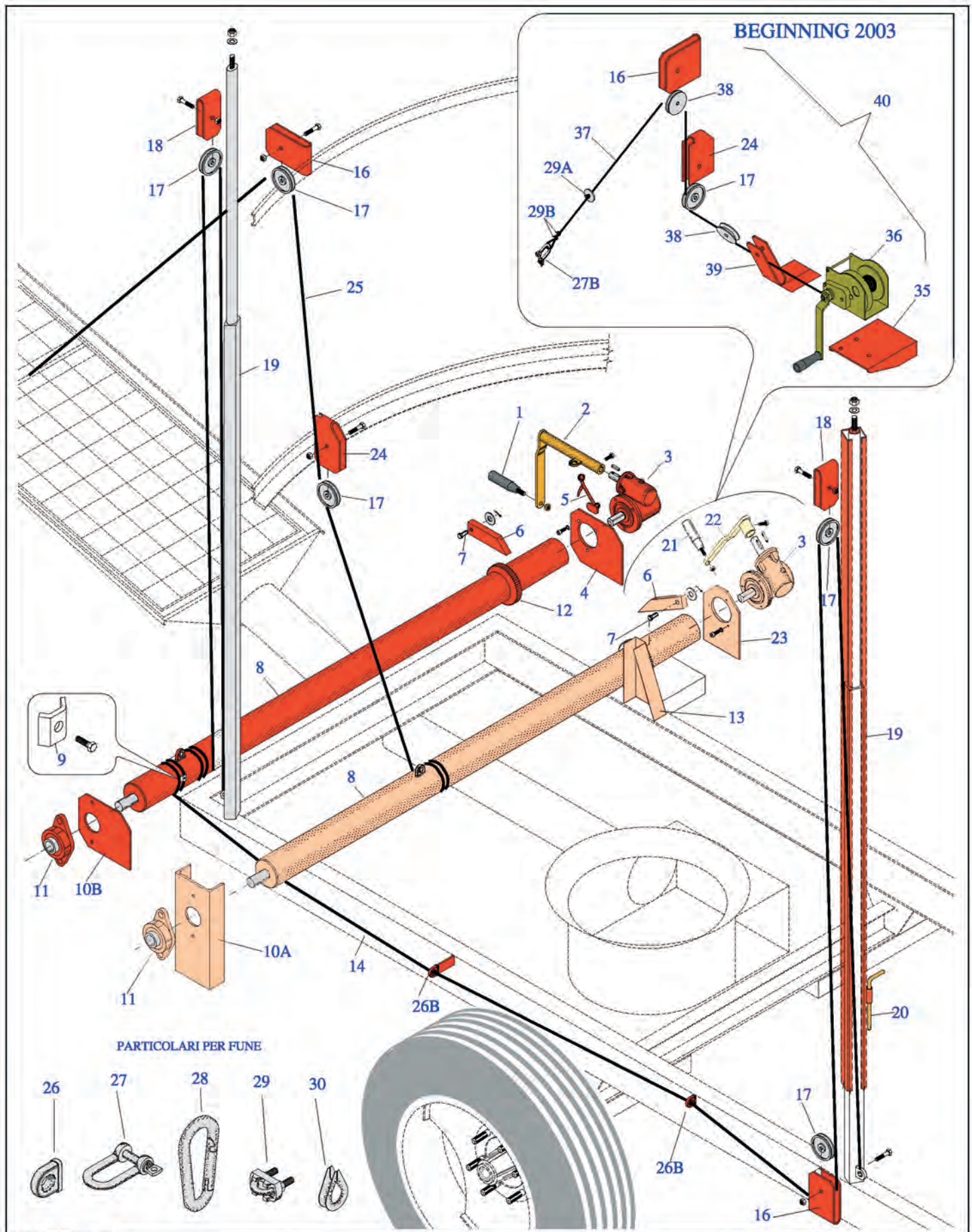


# WINCHES FOR RETRACT SCREEN AND INTAKE HOPPER

TAB 1A
2007

FP PEDROTTI ESSICCATOI

| | WINCHES FOR RETRACT. SCREEN | XL-XLM | TAB. 1A |
|---|---|---|---|
| | | Sheet 1 of 1 | 2013 |

| POS. | DESCRIPTION | UM | Euro € |
|---|---|---|---|
| 0 | WIRE ROPE ø6 | m | 2,28 |
| 0 | WIRE ROPE ø8 | m | 2,58 |
| 01 | HANDLE M12 | N | 11,18 |
| 02 | LEVER | N | 73,62 |
| 03 | GEAR WINCH | N | 442,38 |
| 04 | GEAR WINCH FIXING PLATE | N | 43,78 |
| 05 | SAFETY CLIP | N | 6,48 |
| 06 | SECURITY JACK ON WIRE-ROPE ROLLER | N | 39,51 |
| 07 | PIN | N | 5,34 |
| 08 | WIRE ROPE ROLLER | N | 266,40 |
| 09 | LOKING BRAKET ON WIRW ROPE | N | 3,77 |
| 10B | BEARING SUPPORT | N | 37,08 |
| 11 | BEARING UCFL 206 Ø 30 STND | N | 24,75 |
| 12 | TOOTHED WHEEL | N | 44,94 |
| 14 | WIRE ROPE FOR RETRACTABLE SCREN FOR XLM | m | 2,76 |
| 16 | PULLEY HOLDER SUPPORT | N | 21,26 |
| 17 | ROPE PULLEY Ø 80 | N | 13,87 |
| 18 | TOP PULLEY HOLDER | N | 24,56 |
| 19 | SLIDING RODS FOR TOP SCREEN LIFTING XLM | N | 241,67 |
| 20 | SAFETY PIN | N | 10,09 |
| 24 | PULLEY HOLDER | N | 30,39 |
| 26A | LIGHT UNIT | N | 1,97 |
| 26B | INTERMEDIATE UNIT | N | 2,35 |
| 26C | HEAVY UNIT | N | 2,97 |
| 27A | FIXING BRACKET GALVANIZED Ø 8 | N | 2,77 |
| 27B | FIXING BRACKET GALVANIZED Ø 10 | N | 3,65 |
| 27C | FIXING BRACKET GALVANIZED Ø 12 | N | 4,93 |
| 28A | GALVANIZED BRAKET Ø 8 | N | 3,39 |
| 28B | GALVANIZED BRAKET Ø 10 | N | 4,93 |
| 29A | CLIPS Ø 6 | N | 0,87 |
| 29B | CLIPS Ø 8 | N | 1,27 |
| 30A | REDANCE Ø 6 | N | 0,43 |
| 30B | REDANCE Ø 8 | N | 0,73 |
| 35 | GEAR WINCH FIXING PLATE | N | 20,67 |
| 36 | GEAR WINCH | N | 153,34 |
| 37 | WIRE ROPE ø6 | N | 52,92 |
| 38 | ROPE PULLEY WITH BEARING | N | 12,41 |
| 39 | BOTTOM PULLEY HOLDER | N | 70,63 |
| | | | |
| | | | |
| 40 | INTAKE HOPPER WINCHES KIT | N | 383,25 |
| | | | |
| | | | |
| | | | |
| | | | |
| | | | |
| | | | |
| | | | |
| | | | |
| | | | |
| | | | |

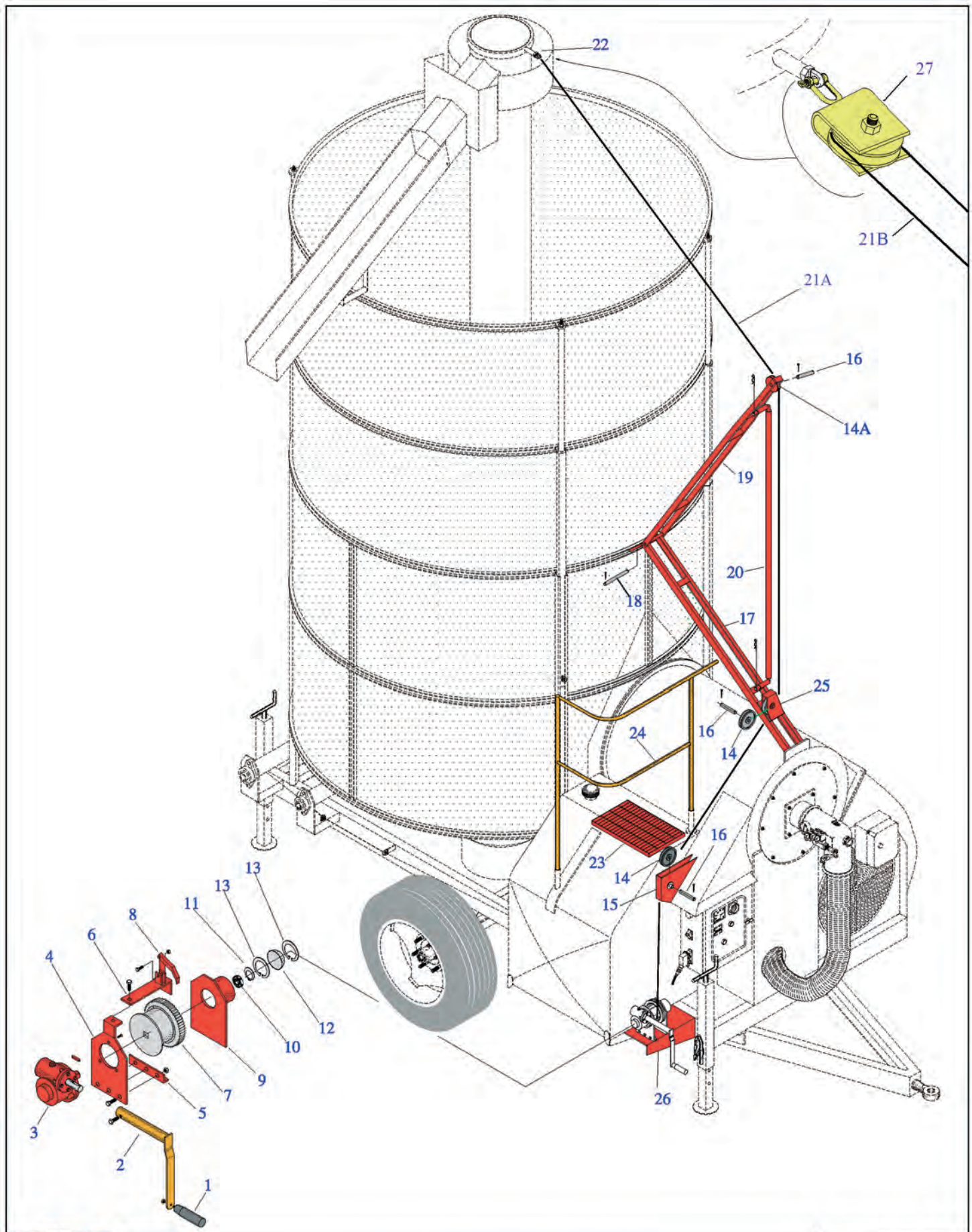


ESSICCATOI

# WINCHES FOR SPIRALS

TAB. 1B
2007

| | WINCHES FOR SPIRALS | XL-XLM | TAB. 1B |
|---|---|---|---|
| | | Sheet 1 of 1 | 2013 |

| POS. | DESCRIPTION | UM | Euro € |
|---|---|---|---|
| 01 | HANDLE M12 | N | 11,18 |
| 02 | LEVER | N | 81,55 |
| 03 | GEAR WINCH | N | 442,38 |
| 04 | GEAR WINCH FIXING PLATE | N | 48,21 |
| 05 | "L" PLATE FIXING | N | 10,57 |
| 06 | SECURITY JACK HOLDER | N | 10,07 |
| 07 | WIRE ROPE ROLLER | N | 158,46 |
| 08 | SECURITY JACK ON WIRE ROPE ROLLER | N | 28,35 |
| 09 | BEARING FIXING PLATE | N | 57,80 |
| 10 | BEARING 6206 STND | N | 12,43 |
| 11 | CIRCLIP Ø 30 E | N | 0,37 |
| 12 | BEARING COVER Ø 62 | N | 2,06 |
| 13 | CIRCLIP Ø 62 E | N | 0,94 |
| 14 | WIRE ROPE PULLEY Ø 120 | N | 32,96 |
| 14A | WIRE ROPE PULLEY Ø 120 | N | 32,96 |
| 15 | PULLEY HOLDER SUPPORT | N | 45,16 |
| 16 | PIN Ø 20 | N | 13,66 |
| 17 | FIX STEEL ROD FOR TOP AUGER WINCH XLM | N | 183,78 |
| 18 | PIN | N | 13,06 |
| 19 | TILTING STEEL ROD FOR TOP AUGER WINCH XLM | N | 179,55 |
| 20 | SUPPORTING ROD FOR TOP AUGER WINCH | N | 155,71 |
| 21A | WIRE ROPE FOR TOP AUGER WINCH Ø 8 L=12,8m | N | 63,70 |
| 21B | WIRE ROPE FOR TOP AUGER WINCH Ø 8 L=20,5m | N | 117,17 |
| 22 | WIRE HOOK | N | 17,54 |
| 23 | STEP 500X300 | N | 69,06 |
| 24 | PROTECTION CAGE ON TOP OF FUEL TANK | N | 128,60 |
| 25 | TOP PULLEY HOLDER | N | 32,37 |
| 26 | SUPPORT PLATE | N | 21,20 |
| 27 | PULLEY HOLDER | N | 55,64 |

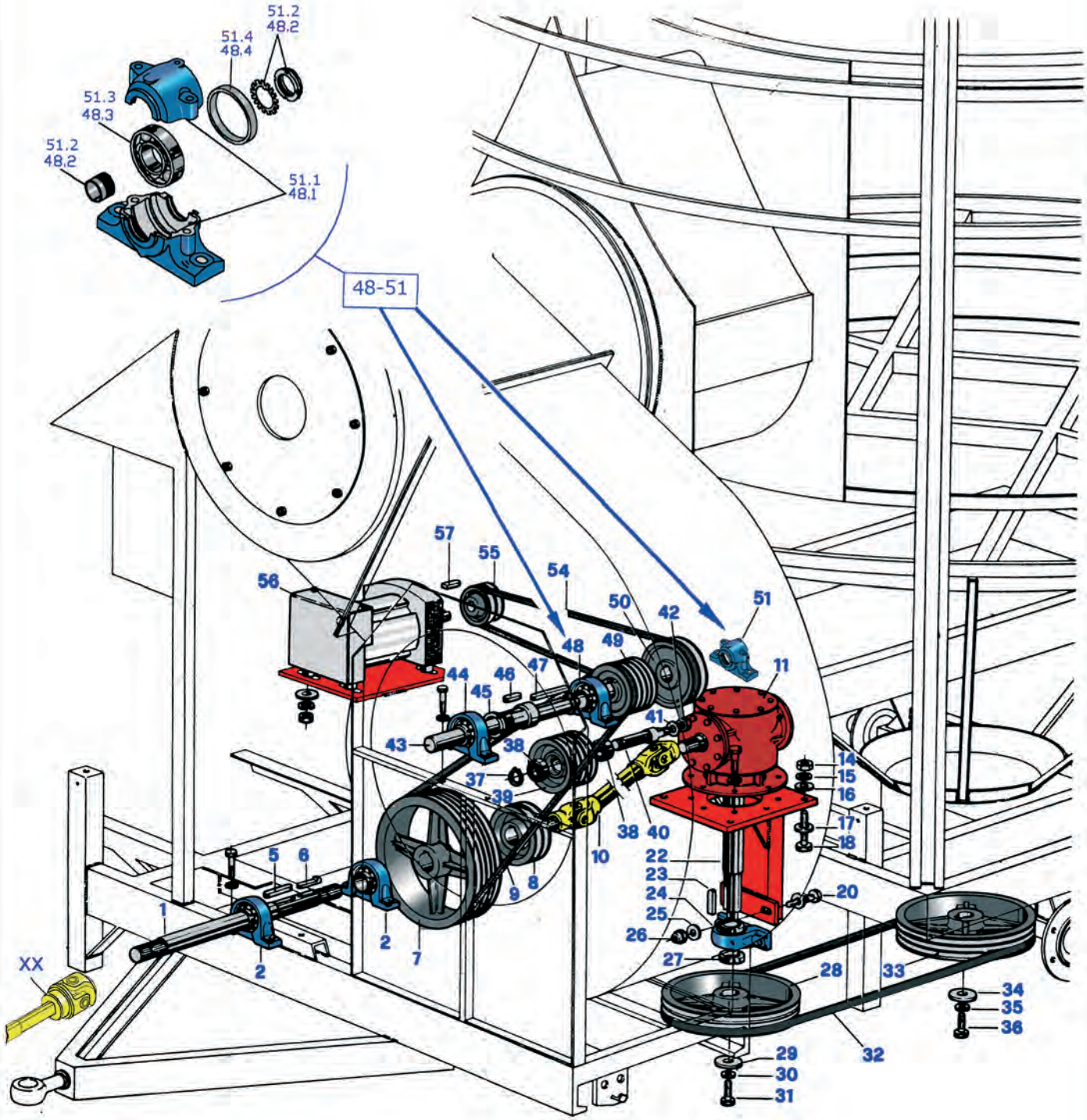


FP PEDROTTI ESSICCATOI

# TRANSMISSION TO CENTRE AUGER TO THE FAN AND TO THE GENERATOR

TAB. 2
2007

| | TRANSMISSION TO CENTRE AUGER, TO THE FAN<br>TO THE FAN AND GENERATOR | XL-XLM<br>Sheet 1 of 2 | TAB. 2<br>2013 |
|---|---|---|---|

| POS. | DESCRIPTION | UM | Euro € |
|---|---|---|---|
| 01A | POWER TAKE OFF SHAFT Ø 50 L 1380 | N | 576,25 |
| 01B | POWER TAKE OFF SHAFT Ø 50 L 1430 | N | 576,25 |
| 02B | STAND UCP 210 Ø 50 STND | N | 46,17 |
| 02A | STAND UCP 210 Ø 50 TOP QUALITY | N | 127,57 |
| 05A | KEY 10X10X60 | N | 3,88 |
| 05B | KEY 10X10X120 | N | 3,47 |
| 06 | KEY 10X10X90 | N | 7,18 |
| 07A | PULLEY B 380 10 RACES | N | 626,19 |
| 07B | PULLEY C 560 4 RACES | N | 673,37 |
| 08A | PULLEY C 170 2 RACES | N | 129,21 |
| 08B | PULLEY C 170 3 RACES | N | 386,12 |
| 09A | BELTS B 79 TOP QUALITY | N | 35,45 |
| 09B | BELTS C 140 TOP QUALITY | N | 90,92 |
| 10 | INTERMEDIATE CARDAN SHAFT | N | 215,13 |
| 11A | GEARBOX LTV14F (SEE DEATAILS TAB. 8) | N | 1.217,28 |
| 11B | GEARBOX TV 274A | N | 1.555,46 |
| 11C | GEARBOX PLATE | N | 293,81 |
| 11D | TENSION ROD | N | 32,74 |
| 23 | KEY 10X10X50 | N | 3,36 |
| 24A | BEARING UCP 210 Ø 50 STD | N | 46,17 |
| 24B | BEARING UCP 210 Ø 50 TOP QUALITY | N | 127,57 |
| 28A | PULLEY B 400 5 RACES | N | 334,62 |
| 28B | PULLEY C 400 5 RACES | N | 810,30 |
| 32A | BELTS B 120 TOP QUALITY | N | 54,76 |
| 32B | BELTS C 132 TOP QUALITY | N | 86,50 |
| 33A | PULLEY B 400 5 RACES | N | 334,62 |
| 33B | PULLEY C 400 5 RACES | N | 810,30 |
| 37 | CIRCLIP Ø 30 E | N | 0,37 |
| 38A | BEARING 30X62X16 2RS - 6206 STND | N | 12,43 |
| 38B | BEARING 30X62X16 2RS - 6206 TOP QUALITY | N | 19,53 |
| 39A | TENSION PULLEY C 132 4 RACES | N | 199,79 |
| 39B | TENSION PULLEY B 132 10 RACES | N | 329,01 |
| 40 | TENSION PULLEY SHAFT | N | 69,47 |
| 42 | SELF LOCKING NUT M20X1,5 | N | 1,02 |
| 43A | FAN SHAFT FOR PULLEY 4 RACES | N | 888,34 |
| 43B | FAN SHAFT FOR PULLEY 10 RACES | N | 954,83 |
| 44 | BEARING UCP 210 Ø 45 TOP QUALITY | N | 8,48 |
| 45 | LOCKING RING | N | 24,56 |
| 46 | KEY 18X10X100 | N | 4,27 |
| 47 | KEY 10X8X120 | N | 3,36 |
| 48 | BEARING SN 516 | N | 628,47 |
| 48.1 | BEARING SN 516 BODY | N | 136,54 |
| 48.2 | BUSH H 316 | N | 84,50 |
| 48.3 | BEARING 70x130x56 22216 TOP QUALITY | N | 377,78 |
| 48.4 | SPACER FOR SN 516 | N | 22,47 |
| 49A | PULLEY B 132 10 RACES | N | 342,65 |
| 49B | PULLEY C 200 4 RACES | N | 466,62 |
| 50 | PULLEY B 200 2 RACE DRIVING GENERATOR | N | 89,50 |
| | | | |
| | | | |
| | | | |

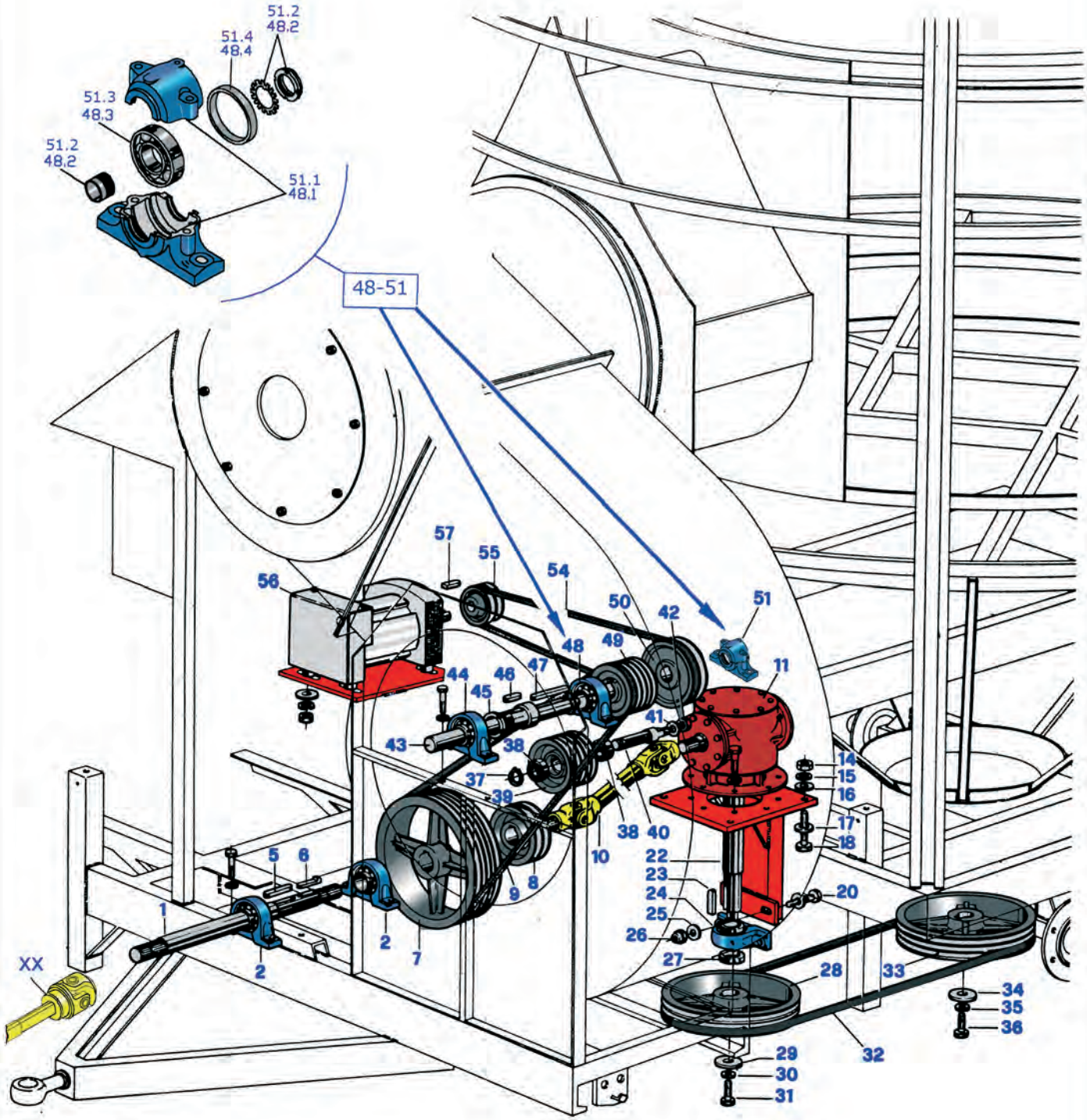


FP PEDROTTI ESSICCATOI

# TRANSMISSION TO CENTRE AUGER TO THE FAN AND TO THE GENERATOR

TAB. 2
2007

| | TRANSMISSION TO CENTRE AUGER, TO THE FAN<br>TO THE FAN AND GENERATOR | XL-XLM<br>Sheet 2 of 2 | TAB. 2<br>2013 |
|---|---|---|---|

| POS. | DESCRIPTION | UM | Euro € |
|---|---|---|---|
| | | | |
| | | | |
| 51 | BEARING SN 510 | N | 191,52 |
| 51,1 | BEARING SN 510 BODY | N | 46,53 |
| 51.2 | BUSH H 310 | N | 16,61 |
| 51.3 | BEARING 1210 TOP QUALITY | N | 98,73 |
| 51.4 | **SPACER FOR SN 510** | N | 22,47 |
| 54 | BELT B 82 TOP QUALITY | N | 35,45 |
| 55 | PULLEY B 95 2 RACE | N | 84,91 |
| 56A | GENERATOR 6,5 KW (SEE TAB. 12) | N | 985,50 |
| 56B | GENERATOR 12 KW (SEE TAB. 12) | N | 1.394,30 |
| 56C | GENERATOR 25 KW (SEE TAB. 12) | N | 4.017,92 |
| | | | |
| | | | |
| | | | |
| | | | |
| | OTHER ITEMS | | |
| | | | |
| xx | FRONT PTO CARDAN SHAFT (L=1300mm) | N | 377,23 |

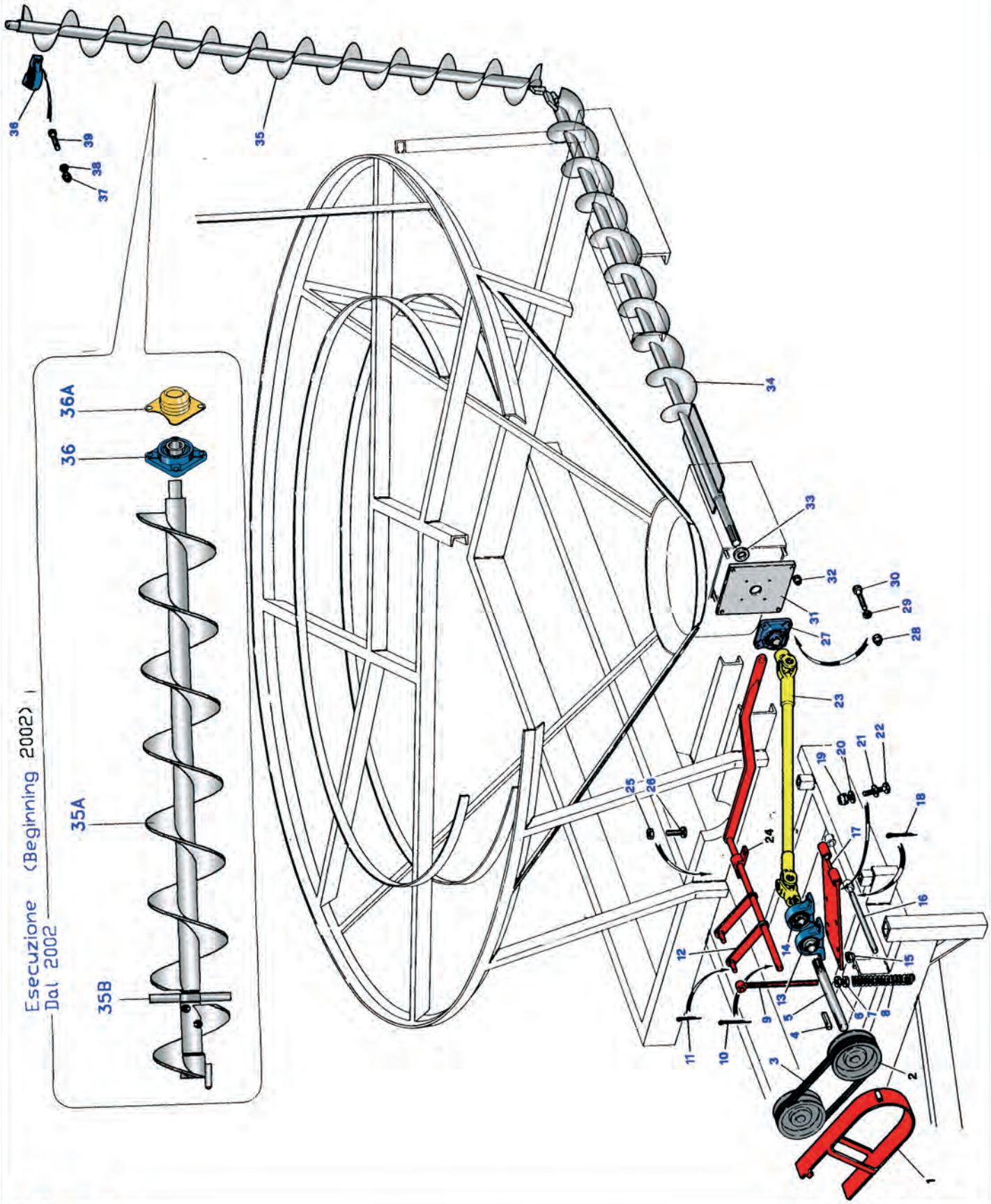


# FILLING AUGER

TAB. 3
2007

FP PEDROTTI ESSICCATOI

# FILLING AUGER

XL-XLM | TAB. 3

Sheet 1 of 1 | 2013

| POS. | DESCRIPTION | UM | Euro € |
|---|---|---|---|
| 01 | PROTECTION GUARD | N | 74,54 |
| 02 | PULLEY C 170 2 RACES | N | 129,21 |
| 03 | BELT C 48 TOP QUALITY | N | 29,44 |
| 04 | KEY 10X10X50 | N | 3,36 |
| 05 | SHAFT Ø 35 L=350 | N | 55,74 |
| 13 | BEARING UCP 207 Ø 35 STND | N | 29,54 |
| 14 | BEARING UCP 207 Ø 35 STND | N | 29,54 |
| 23A | CARDAN SHAFT 1600 mm TX1 | N | 172,46 |
| 27 | BEARING UCF 207 Ø 35 STND | N | 36,15 |
| 31 | INOX STEEL COVER | N | 38,52 |
| 33 | SPACER Ø 35 | N | 6,20 |
| 34A | FIX LOADING AUGER Ø 200 | N | 211,92 |
| 34B | FIX LOADING AUGER Ø 250 | N | 247,38 |
| 35 | TILTING LOADING AUGER 48X170 | N | 238,73 |
| 35A | TILTING LOADING AUGER Ø 200 WHITH CROSS BEARIN, COMPLETE | N | 472,78 |
| 35A.1 | TILTING LOADING AUGER Ø 250 WHITH CROSS BEARIN, COMPLETE | N | 565,46 |
| 35B | CROSS BEARING ON FILLING AUGER WHITH BEARING BRASS | N | 76,62 |
| 35B.1 | CROSS BEARING ON FILLING AUGER WHITH BEARING TOP QUALITY | N | 127,25 |
| 36 | BEARING UCF 206 Ø 30 STND (BEGINING MACHINES 1998) | N | 26,12 |
| 36,1 | BEARING UCP 206 STND | N | 25,24 |
| 36A | BEARING COVER | N | 20,00 |

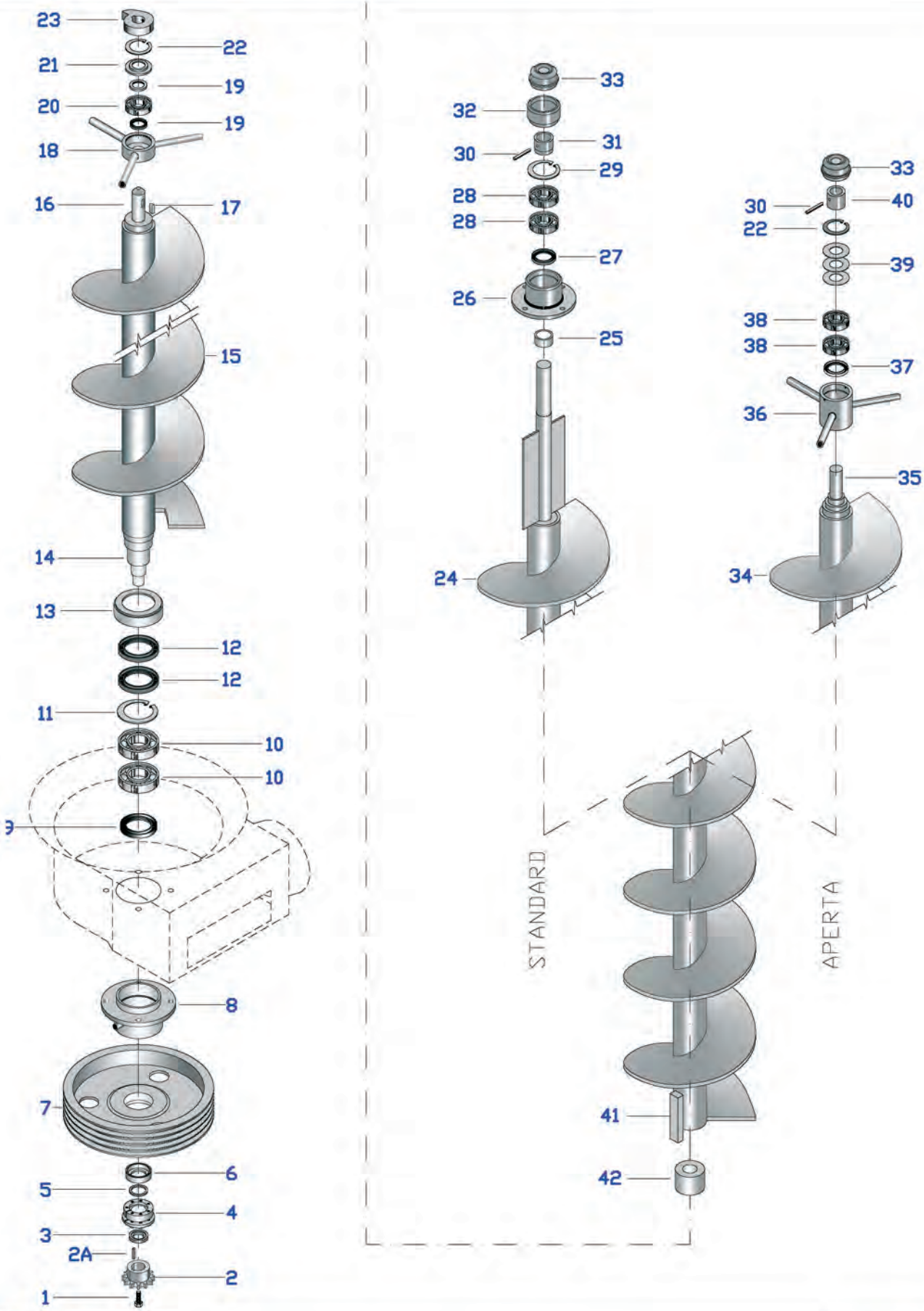
23
22
21
19
20
19
18
16
17
15
14
13
12
12
11
10
10
9
8
7
6
5
4
3
2A
2
1
33
32
31
30
29
28
28
27
26
25
24
33
30
40
22
39
38
38
37
36
35
34
STANDARD
APERTA
41
42

| | CENTRE AUGER | XL-XLM | TAB. 4A |
|---|---|---|---|
| | | Sheet 1 of 2 | 2013 |

| POS. | DESCRIPTION | UM | Euro € |
|---|---|---|---|
| 01 | BOLT M12X1,25 L=35 | N | 0,29 |
| 02 | CASEHARDENED PINION Z 11 3/4" | N | 82,17 |
| 03 | SPACER FOR VIBLOCK | N | 9,42 |
| 04 | VIBLOCK | N | 34,38 |
| 05 | SPACER FOR VIBLOCK | N | 3,51 |
| 06 | BOTTOM SPACER | N | 14,66 |
| 07A | PULLEY B 400 5 RACES | N | 334,62 |
| 07B | PULLEY C 400 5 RACES | N | 810,30 |
| 08A | IRON BASE STAND (assembled vedi TAB 00) | N | 237,26 |
| 08B | IRON BASE STAND FOR XLMJ (assembled vedi TAB 00) | N | 420,18 |
| 09A | SEAL 70X100X12 | N | 6,19 |
| 09B | SEAL 85X110X12 | N | 8,87 |
| 10A | BEARING 60X110X22 7212B TOP QUALITY | N | 227,94 |
| 10B | BEARING 75X130X25 7215B TOP QUALITY | N | 383,43 |
| 11A | CIRCLIP Ø 110 I | N | 3,91 |
| 11B | CIRCLIP Ø 130 I | N | 6,61 |
| 12A | SEAL 75X110X12 | N | 7,64 |
| 12B | SEAL 90X130X12 | N | 13,83 |
| 13A | DUST COVER ø 90 | N | 21,84 |
| 13B | DUST COVER ø 100 | N | 64,75 |
| 14A | BOTTOM PIN FOR CENTRE SPIRAL | N | 157,20 |
| 14B | BOTTOM PIN FOR CENTRE SPIRAL FOR XLMJ | N | 278,37 |
| 15 | BOTTOM SPIRAL (see TAB 00) | N | |
| 16A | TOP PIN FOR CENTRE SPIRAL ø 90 | N | 106,17 |
| 16B | TOP PIN FOR CENTRE SPIRAL ø 100 | N | 153,84 |
| 17A | KEY 10X10X30 | N | 2,91 |
| 17B | KEY 12X10X25 | N | 3,63 |
| 18A | BEARING HOUSING Ø 90 (assembled see TAB 00) | N | 133,13 |
| 18B | BEARING HOUSING Ø 100 (assembled see TAB 00) | N | 186,88 |
| 19A | SEAL 35X47X7 | N | 5,29 |
| 19B | SEAL 45X60X7 | N | 4,35 |
| 20A | BEARING 35X72X17 6207 TOP QUALITY | N | 18,51 |
| 20B | BEARING 45X77X17 6009 TOP QUALITY | N | 31,57 |
| 21A | CAP Ø 72 | N | 14,74 |
| 21B | CAP Ø 100 | N | 18,39 |
| 22A | CIRCLIP Ø 72 I | N | 1,31 |
| 22B | CIRCLIP Ø 75 I | N | 1,42 |
| 23A | DRAGGING JACK | N | 54,55 |
| 23B | DOUBLE DRAGGING JACK | N | 60,47 |
| 23C | DOUBLE DRAGGING JACK Ø HOLE 45 | N | 60,47 |
| 24 | TOP SPIRAL STND (see TAB 00) | N | 1.299,35 |
| 25 | SPACER Ø 40 | N | 12,72 |
| 26 | IRON UPPER STAND (assembled see TAB 00) | N | 115,59 |
| 27 | SEAL 50X72X8 | N | 6,01 |
| 28A | BEARING 40X80X23 2208 STND beginning 1994 | N | 36,68 |
| 28B | BEARING 40X80X23 2208 TOP QUALITY beginning 1994 | N | 107,48 |
| 28C | BEARING 40X80X18 1208 STND until 1994 | N | 42,16 |
| 28D | BEARING 40X80X18 1208 TOP QUALITY until 1994 | N | 69,53 |
| 29 | CIRCLIP Ø 80 I | N | 1,95 |
| | | | |
| | | | |

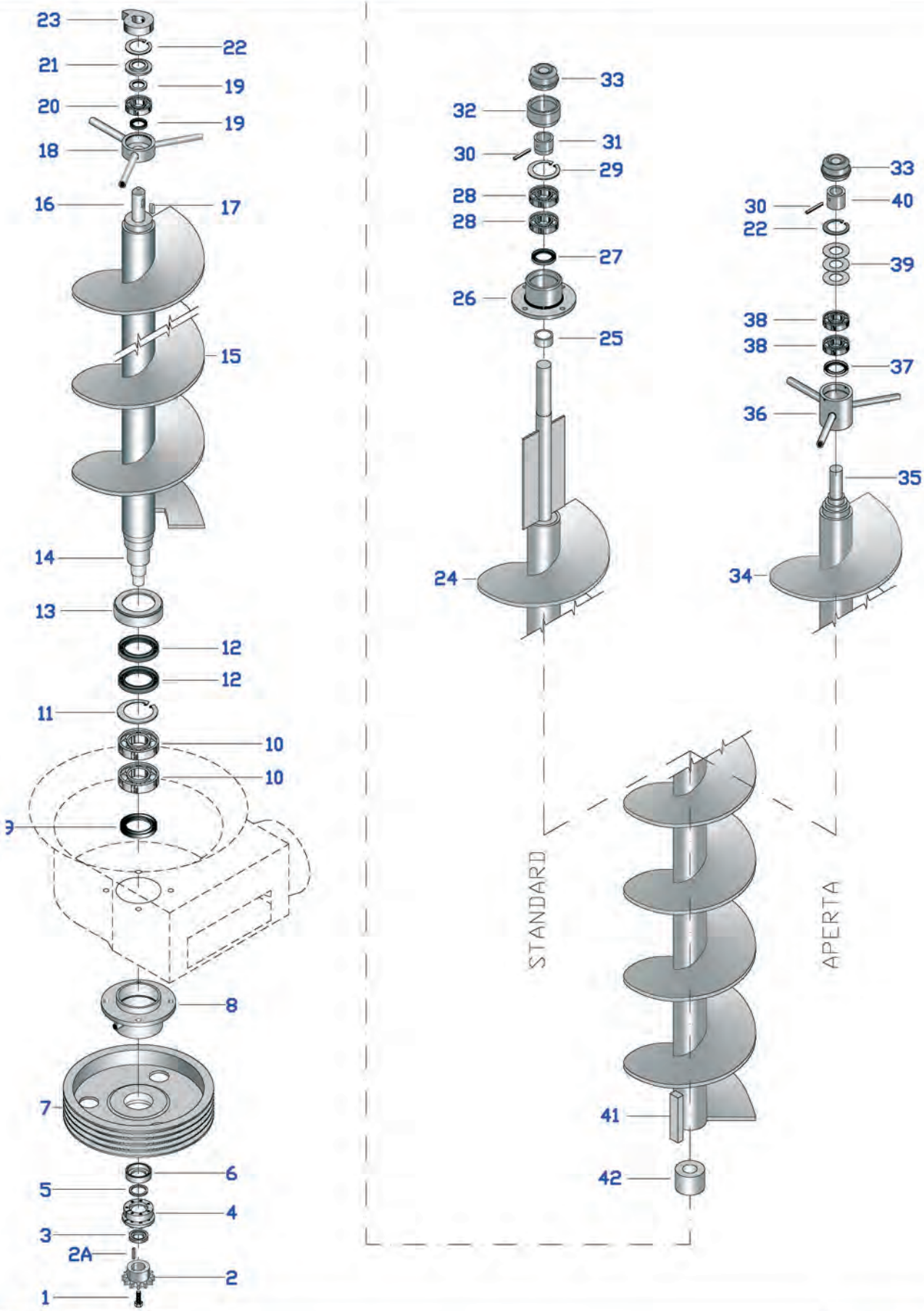
23
22
21
19
20
19
18
16
17
15
14
13
12
12
11
10
10
9
8
7
6
5
4
3
2A
2
1
33
32
31
30
29
28
28
27
26
25
24
33
30
40
22
39
38
38
37
36
35
34
STANDARD
APERTA
41
42

| POS. | DESCRIPTION | UM | Euro € |
|---|---|---|---|
| 30 | SAFETY PIN | N | 0,49 |
| 31 | SPACER Ø 40 | N | 16,79 |
| 32 | UPPER SPACER 40X50 | N | 25,43 |
| 33 | COVER Ø 62 | N | 3,07 |
| 34 | TOP SPIRAL BUBBLE DESIGN (see TAB 00) | N | |
| 35A | TOP PIN FOR CENTRE AUGER | N | 115,07 |
| 35B | TOP PIN FOR CENTRE AUGER Ø 100 | N | 137,34 |
| 36A | TOP BEARING HOUSING (assembled see TAB 00) Ø 90 | N | 160,30 |
| 36B | TOP BEARING HOUSING (assembled see TAB 00) Ø 100 | N | 195,18 |
| 37A | SEAL 45X66X10 | N | 4,04 |
| 37B | SEAL 55X72X7 | N | 6,01 |
| 38A | BEARING 35X72X23 2207 2RS TOP QUALITY | N | 88,88 |
| 38B | BEARING 45X85X19 7209 2RS TOP QUALITY | N | 62,23 |
| 38D | BEARING 35X72X17 1207 2RS TOP QUALITY | N | 62,23 |
| 39A | SPACER Ø71,7X60,3X1mm | N | 2,45 |
| 39B | SPACER Ø85X72,3X1,5mm | N | 3,21 |
| 40 | SPACER Ø 35 | N | 16,11 |
| 41 | DRIWING PLATE PIN | N | 10,90 |
| 42A | INNER BUSH Ø 90 | N | 32,34 |
| 42B | INNER BUSH Ø 100 | N | 60,24 |

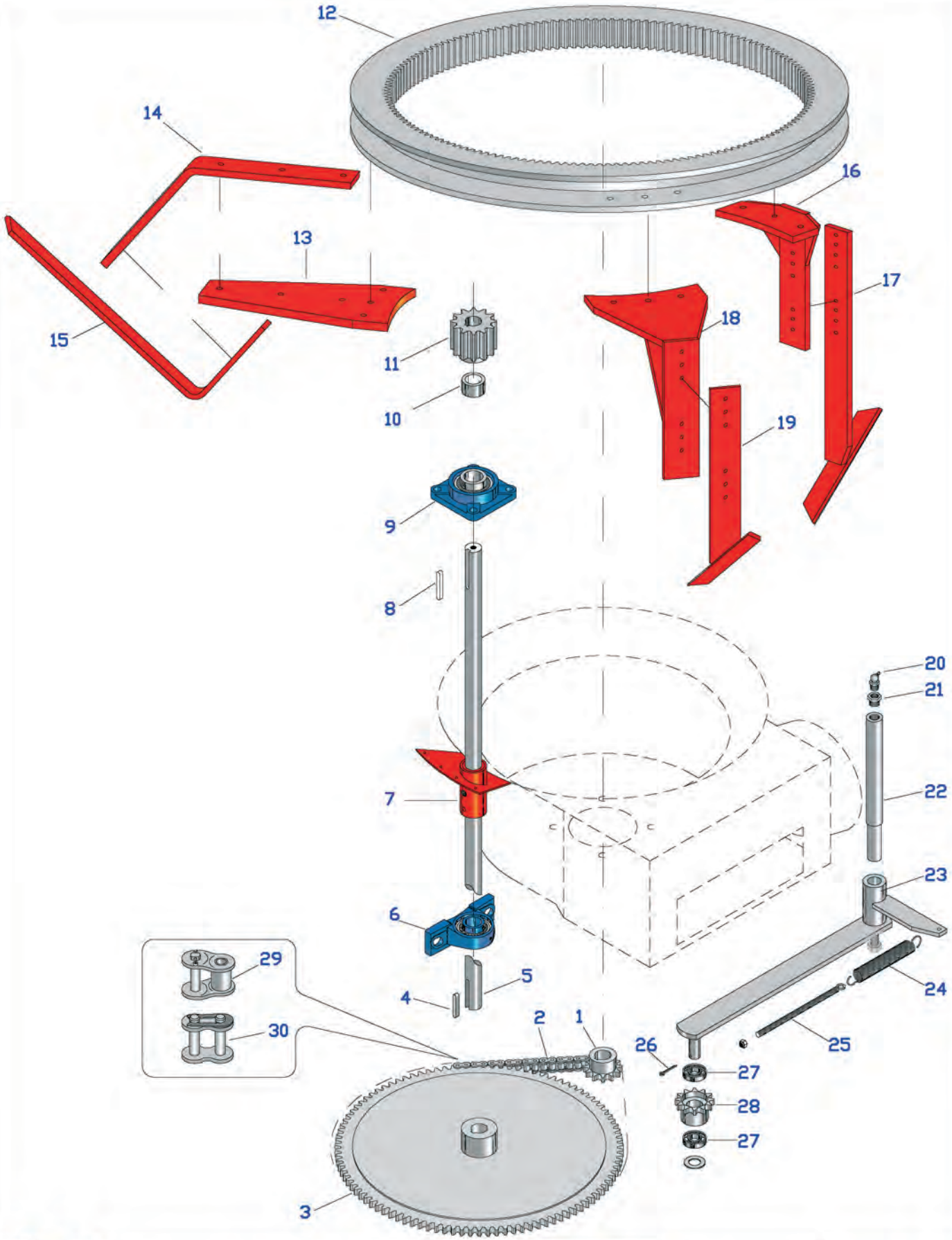


ESSICCATOI

# AGITATORS - INTERNAL GEAR TRASMISSION BOTTOM BY CHAIN

TAB. 4C
2007

| | AGITATORS<br>TRANSMISSION BOTTOM BY CHAIN | XL-XLM<br>Sheet 1 of 1 | TAB. 4C<br>2013 |
|---|---|---|---|

| POS. | DESCRIZIONE | UM | Euro € |
|---|---|---|---|
| 01 | CASEHARDENED PINION Z 11 3/4" | N | 82,17 |
| 02 | CHAIN ¾ ASA | N | 71,41 |
| 03A | SPROCKET Z 90 ¾ | N | 381,88 |
| 03B | SPROCKET Z 114 ¾ | N | 414,64 |
| 04 | KEY 10X8X50 | N | 2,91 |
| 05 | DRIVING SHAFT Ø 35 L=1605 | N | 158,27 |
| 06 | BEARING UCP 207 TOP QUALITY | N | 83,77 |
| 07 | IRON INTERMEDIATE STAND | N | 59,50 |
| 08 | KEY 10X8X60 | N | 3,15 |
| 09 | BEARING UCF 206 TOP QUALITY | N | 87,42 |
| 10 | SPACER Ø 42 L=40 | N | 10,15 |
| 11 | CASEHARDENED DRIVING PINION Z 14 M6 | N | 132,50 |
| 12A | TOOTHED GEAR Z 156 M6 Ø 1100 | N | 2.621,07 |
| 12B | TOOTHED GEAR Z 196 M6 Ø 1300 | N | 4.182,90 |
| 13 | PART OF AGITATOR ARM | N | 152,24 |
| 14 | | | |
| 15 | PART OF AGITATOR ARM | N | 218,91 |
| 16 | PART OF AGITATOR ARM | N | 122,98 |
| 17 | PART OF AGITATOR ARM | N | 90,61 |
| 18 | PART OF AGITATOR ARM | N | 193,30 |
| 19 | PART OF AGITATOR ARM | N | 92,09 |
| 20 | GREASER Ø 1/4" | N | 2,07 |
| 21 | REDUCTION 3/8"-1/4" | N | 1,12 |
| 22 | TENSIONING SUPPORT | N | 62,84 |
| 23 | TENSIONING LEVER | N | 108,61 |
| 24 | TENSIONING SPRING | N | 3,72 |
| 25 | TENSION ROD | N | 11,78 |
| 26 | PIN Ø4X30 | N | 0,37 |
| 27 | BEARING 20X42X12 6004 2RS | N | 4,20 |
| 28 | PINION Z11 3/4 NEUTRAL | N | 66,70 |
| 29 | CHAIN JOIN | N | 9,90 |
| 30 | CHAIN JOIN | N | 5,46 |

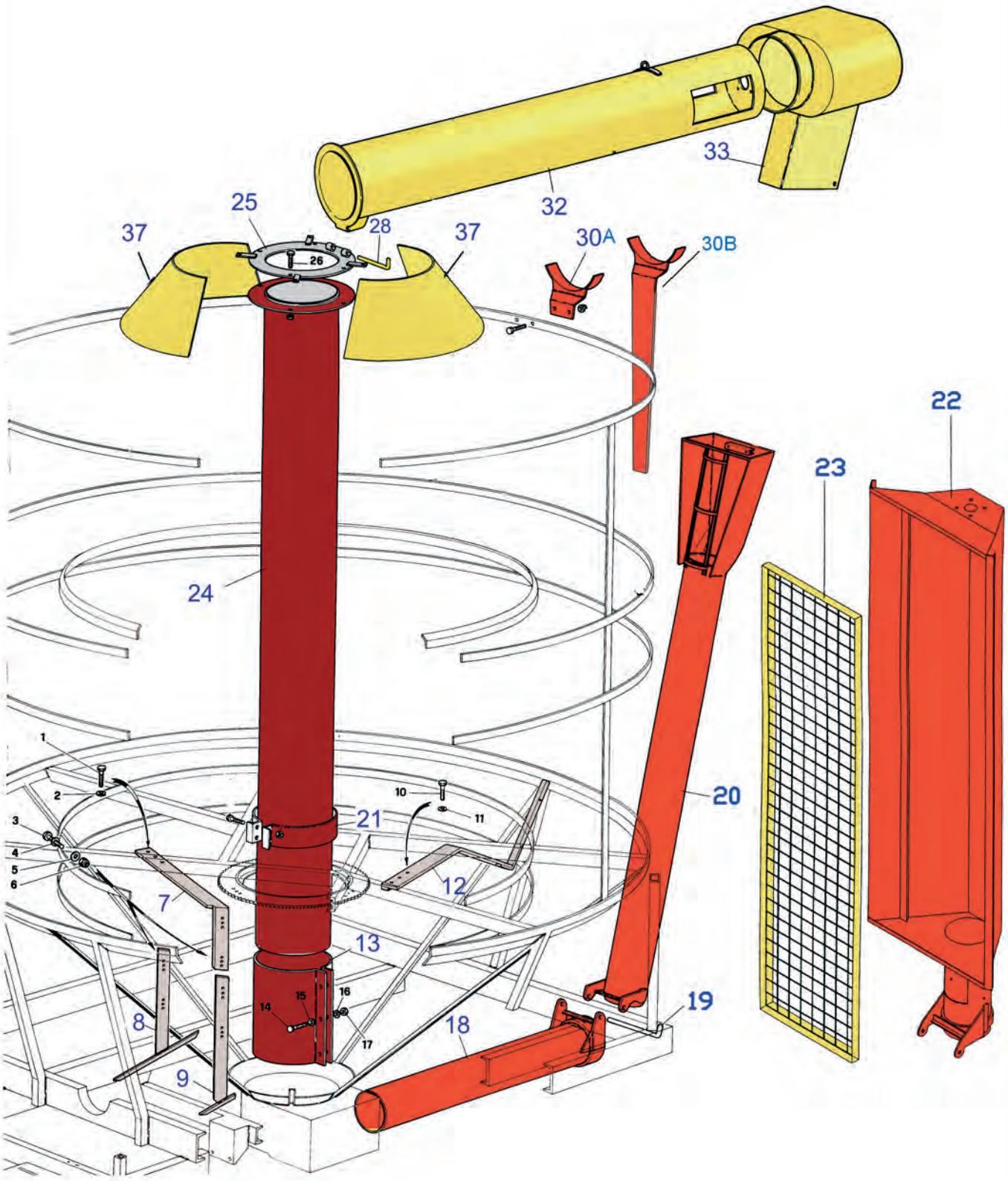
33
32
25
28
37
37
30A
30B
26
22
23
24
20
1
2
3
4
5
6
10
11
21
12
7
13
14
15
16
17
8
18
19
9

| | SPIRAL PIPES | XL-XLM | TAB. 5 |
|---|---|---|---|
| | | Sheet 1 of 1 | 2013 |

| POS. | DESCRIPTION | UM | Euro € |
|---|---|---|---|
| | | | |
| | | | |
| 13A | ADJUSTING BAND Ø 360 | N | 123,90 |
| 13B | ADJUSTING BAND Ø 450 | N | 152,69 |
| 18A | FIX PIPE Ø 200 | N | 223,04 |
| 18B | FIX PIPE Ø 250 | N | 276,39 |
| 19 | FIXING PIN | N | 21,24 |
| 20 | TILTING PIPE Ø 200 C/W INTAKE HOPPER ("ITALIA" Type) | N | 556,88 |
| 21A | PIPE LOCKING BAND Ø 360 | N | 109,20 |
| 21B | PIPE LOCKING BAND Ø 450 | N | 116,50 |
| 22A | TILTING PIPE Ø 200 C/W INTAKE HOPPER | N | 899,22 |
| 22B | TILTING PIPE Ø 200 C/W INTAKE HOPPER FOR CROSS BEARING | N | 946,17 |
| 22C | TILTING PIPE Ø 250 C/W INTAKE HOPPER FOR CROSS BEARING | N | 1.091,03 |
| 23 | TOP PROTECTION SCREEN ON INTAKE HOPPER | N | 230,18 |
| 24 | BOTTOM TUBE (see TAB 00 "TUBES FOR CENTRE AUGER") | N | |
| 25A | HEAD BAND Ø 360 | N | 159,23 |
| 25B | HEAD BAND Ø450 | N | 159,23 |
| 28 | ANCHORAGE PIN | N | 21,24 |
| 30A | SUBSTAINING SUPPORT | N | 81,26 |
| 30B | REINFORCED SUBSTAINING SUPPORT | N | 269,28 |
| 32 | TOP TUBE (see TAB 00 "TUBES FOR CENTRE AUGER") | N | |
| 33 | TOP HAT ( see TAB 13) | N | |
| 37A | HALF TOP PLENUM CONIC SECTION Ø 360 (1 Pcs) | N | 122,07 |
| 37B | HALF TOP PLENUM CONIC SECTION Ø 450 (1 Pcs) | N | 122,07 |

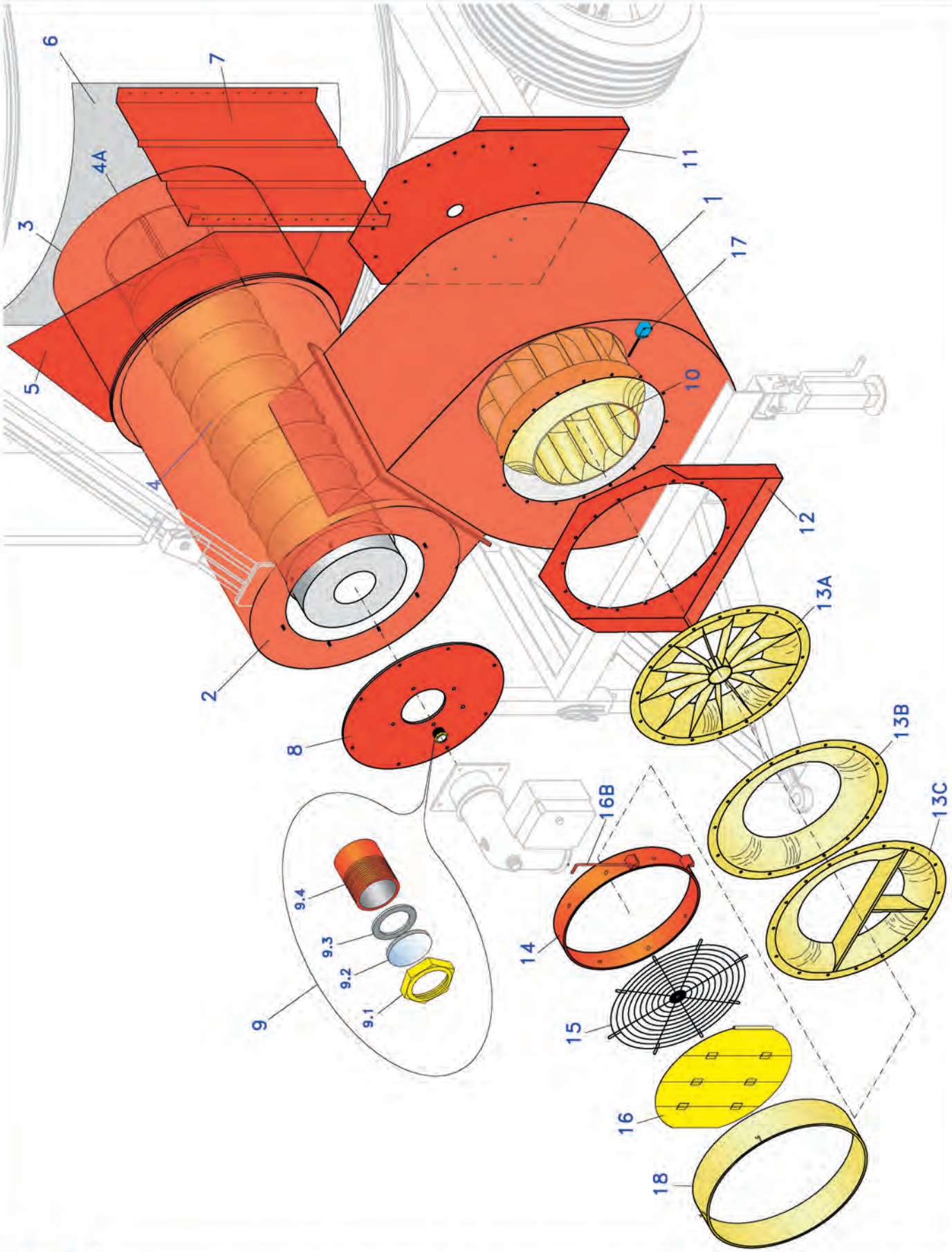


FP PEDROTTI ESSICCATOI

# COMBUSTION CHAMBER FAN UNIT

TAB 6
2007

| | COMBUSTION CHAMBER<br>FAN UNIT | XL-XLM<br>Sheet 1 of 1 | TAB. 6<br>2013 |
|---|---|---|---|

| POS. | DESCRIPTION | UM | Euro € |
|---|---|---|---|
| 1A | FAN HOUSING LARGE FR 801 | N | 1.062,76 |
| 1B | FAN HOUSING LARGE FR 901 | N | 2.566,69 |
| 2A | OUTER PART OF COMBSTION CHAMBER FUNNEL Ø 950 | N | 1.347,59 |
| 2B | OUTER PART OF COMBSTION CHAMBER FUNNEL Ø 1050 | N | 1.632,29 |
| 3A | INLET PART OF COMBSTION CHAMBER FUNNEL Ø 950 | N | 909,53 |
| 3B | INLET PART OF COMBSTION CHAMBER FUNNEL Ø 1050 | N | 1.049,98 |
| 4A | COMBUSTION CHAMBER Ø 460 | N | 955,42 |
| 4B | COMBUSTION CHAMBER LARGE Ø 600 | N | 1.240,18 |
| 4A.1 | COMBUSTION CHAMBER TERMINAL | N | 99,78 |
| 4A.2 | COMBUSTION CHAMBER TERMINAL | N | 163,69 |
| 7 | SIDE VERTICAL SHEET | N | 114,04 |
| 8 | FUNNEL FRONT COVER | N | 159,91 |
| 9 | SPY HOLE | N | 9,71 |
| 9.1 | FIXING NUT Ø 1"1/4 | N | 2,93 |
| 9.2 | GLASS | N | 2,58 |
| 9.3 | GASKET Ø 1"1/4 | N | 0,46 |
| 9.4 | COUPING Ø 1" 1/4 L=50 | N | 3,75 |
| 10A | FAN FR 801 | N | 1.483,97 |
| 10B | FAN FR 901 | N | 2.836,05 |
| 11A | BACK SIDE GUARD FOR FR 801 | N | 447,18 |
| 11B | BACK SIDE GUARD FOR FR 901 | N | 896,75 |
| 12A | FRONT SIDE GUARD FOR FR801 | N | 387,71 |
| 12B | FRONT SIDE GUARD FOR FR901 | N | 833,27 |
| 13A.1 | AIR CONVEYOR C/W DEFLECTORS FOR FR 801 | N | 748,43 |
| 13A.2 | AIR CONVEYOR C/W DEFLECTORS FOR FR 901 | N | 1.102,15 |
| 13B.1 | AIR CONVEYOR WITHOUT DEFLECTORS FOR FR 801 | N | 274,25 |
| 13B.2 | AIR CONVEYOR WITHOUT DEFLECTORS FOR FR 901 | N | 575,62 |
| 13C.1 | AIR CONVEYOR C/W BEARING SUPPORT FOR FAN SHAFT FOR FR 801 | N | 421,34 |
| 13C.2 | AIR CONVEYOR C/W BEARING SUPPORT FOR FAN SHAFT FOR FR 901 | N | 728,14 |
| 14 | CALENDED RING FOR FAN COVER | N | 80,49 |
| 15A | FAN GUARD FOR FR 801 | N | 170,56 |
| 15B | FAN GUARD FOR FR 901 | N | 186,95 |
| 16 | FAN COVER | N | 244,32 |
| 16B | PIN FAN COVER | N | 7,01 |
| 17 | FAN COVER SAFETY SWITCH | N | 41,74 |

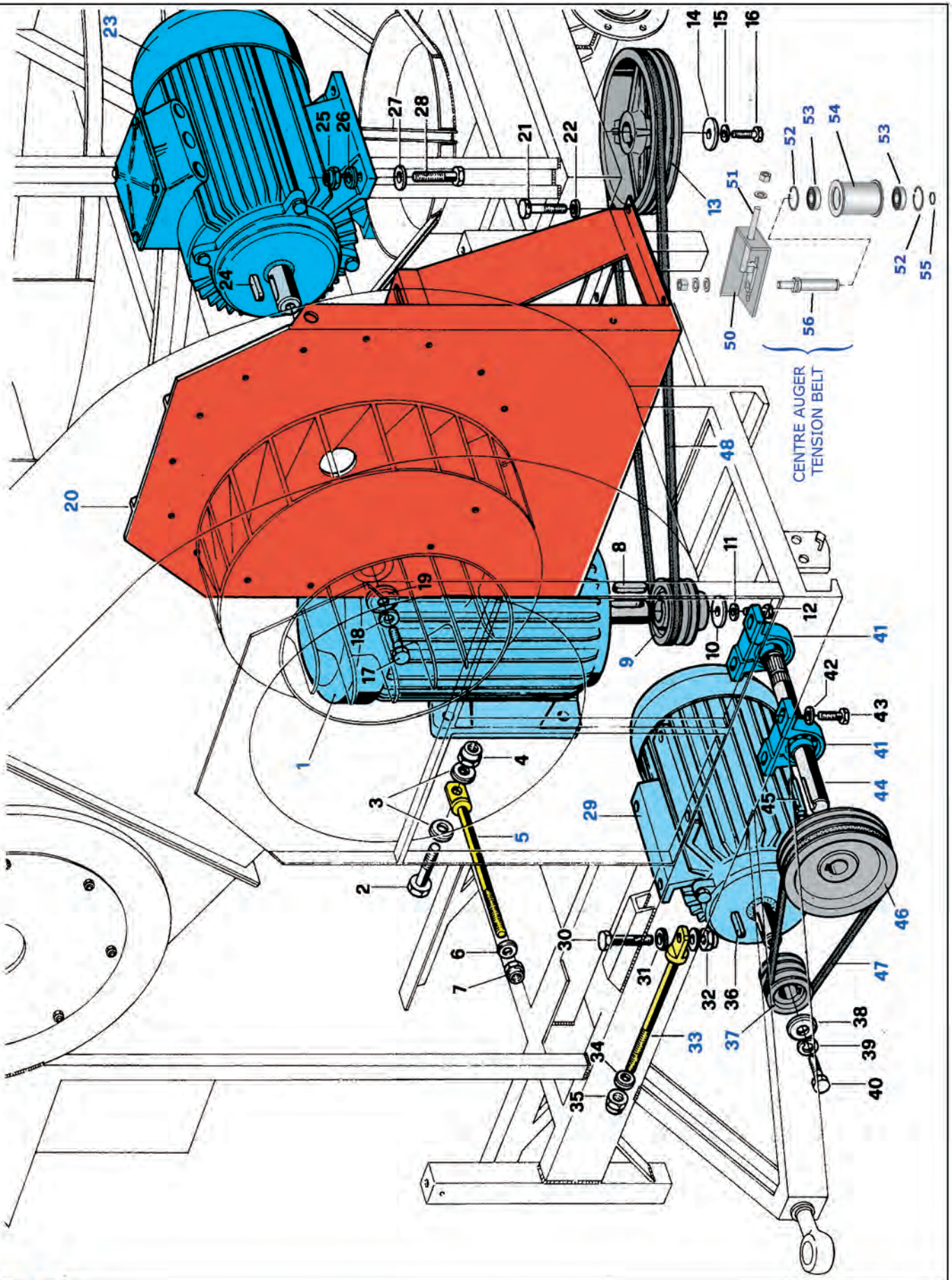


# ELECTRIC TRASMISSION

TAB 7
2012

FP PEDROTTI ESSICCATOI

| | ELECTRIC TRANSMISSION | XL-XLM | TAB. 7 |
|---|---|---|---|
| | | Sheet 1 of 1 | 2013 |

| POS. | DESCRIPTION | UM | Euro € |
|---|---|---|---|
| 01A | ELECTRIC MOTOR CENTRE AUGER 22 KW (HP 30) 1000 RPM | N | 3.963,90 |
| 01B | ELECTRIC MOTOR CENTRE AUGER 30 KW (HP 40) 1000 RPM | N | 6.113,75 |
| 01C | ELECTRIC MOTOR CENTRE AUGER 37 KW (HP 50) 1000 RPM | N | 6.785,35 |
| 5 | TENSIONNER ROD | N | 21,96 |
| 9A | PULLEY B 118 5 RACES | N | 119,87 |
| 9B | PULLEY B 180 6 RACES | N | 235,25 |
| 13A | PULLEY B 400 5 RACES FOR VIBLOCK | N | 334,62 |
| 13B | PULLEY B 600 6 RACES | N | 731,03 |
| 20A | BACK SIDE GUARD AND MOTOR STANDING SUPPORT FOR FR 801 | N | 782,29 |
| 20B | BACK SIDE GUARD AND MOTOR STANDING SUPPORT FOR FR 901 | N | 1.683,10 |
| 23A | ELECTRIC MOTOR FAN 22 KW (HP 30) 1500 RPM | N | 3.044,10 |
| 23B | ELECTRIC MOTOR FAN 30 KW (HP 40) 1500 RPM | N | 3.865,35 |
| 23C | ELECTRIC MOTOR FAN 37 KW (HP 500) 1500 RPM | N | 5.208,55 |
| 29A | ELECTRIC MOTOR FILLING AUGER 7,5 KW (HP 10) 1500 RPM | N | 1.062,15 |
| 29B | ELECTRIC MOTOR FILLING AUGER 11 KW (HP 15) 1500 RPM | N | 1.689,95 |
| 33 | TENSIONNER ROD | N | 20,62 |
| 37A | PULLEY A 90 4 RACES ø 38 | N | 77,79 |
| 37B | PULLEY A 90 4 RACES ø 42 | N | 77,79 |
| 41 | BEARING UCP 207 STND | N | 29,54 |
| 44 | SHAFT Ø 35 L=420 | N | 60,53 |
| 46 | PULLEY A 250 4 RACES | N | 179,52 |
| 47A | BELTS AX 44 TOP QUALITY | N | 28,04 |
| 47B | BELTS AX 46 TOP QUALITY | N | 29,98 |
| 48A | BELTS B 120 TOP QUALITY | N | 54,76 |
| 48B | BELTS SB 140 TOP QUALITY | N | 60,94 |
| | | | |
| 50 | TENSIONER BELTS PLATE | N | 48,36 |
| 51 | TENSIONER BELTS TIE-ROD | N | 32,74 |
| 52 | SEEGER 62i | N | 0,94 |
| 53 | BEARING 6206 2RS TOP QUALITY | N | 19,53 |
| 54 | TENSIONER BELTS ROLL 5 RACES | N | 141,15 |
| 55 | SEEGER 32e | N | 0,37 |
| 56 | TENSIONER BELTS PIN 5 RACES | N | 65,49 |

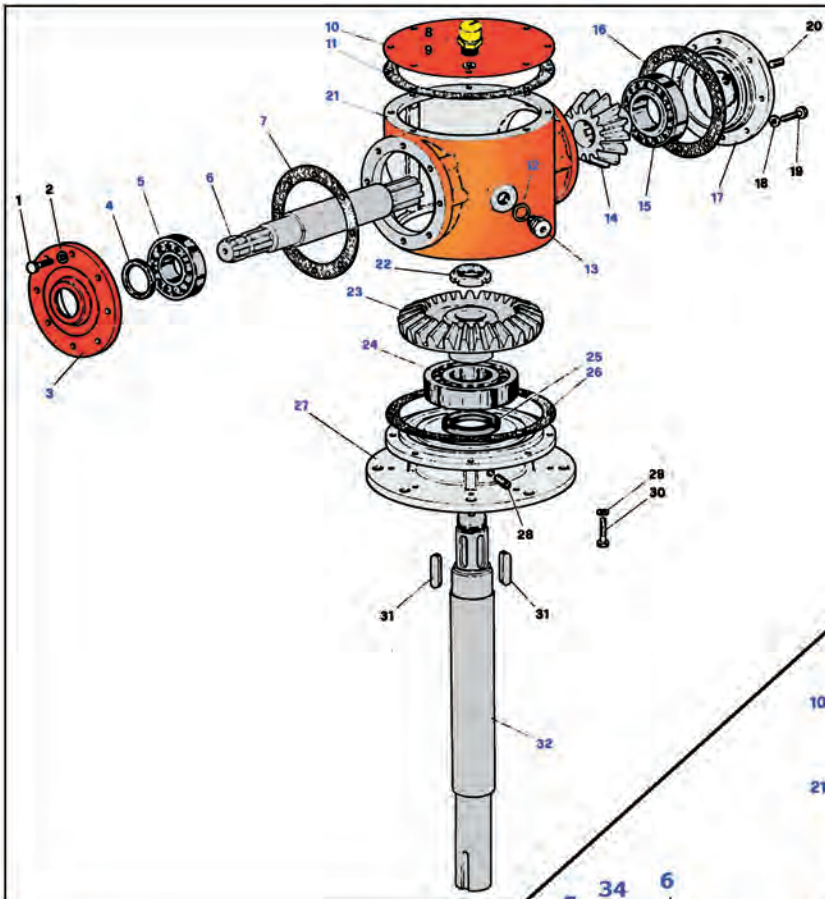
UNTIL 2007

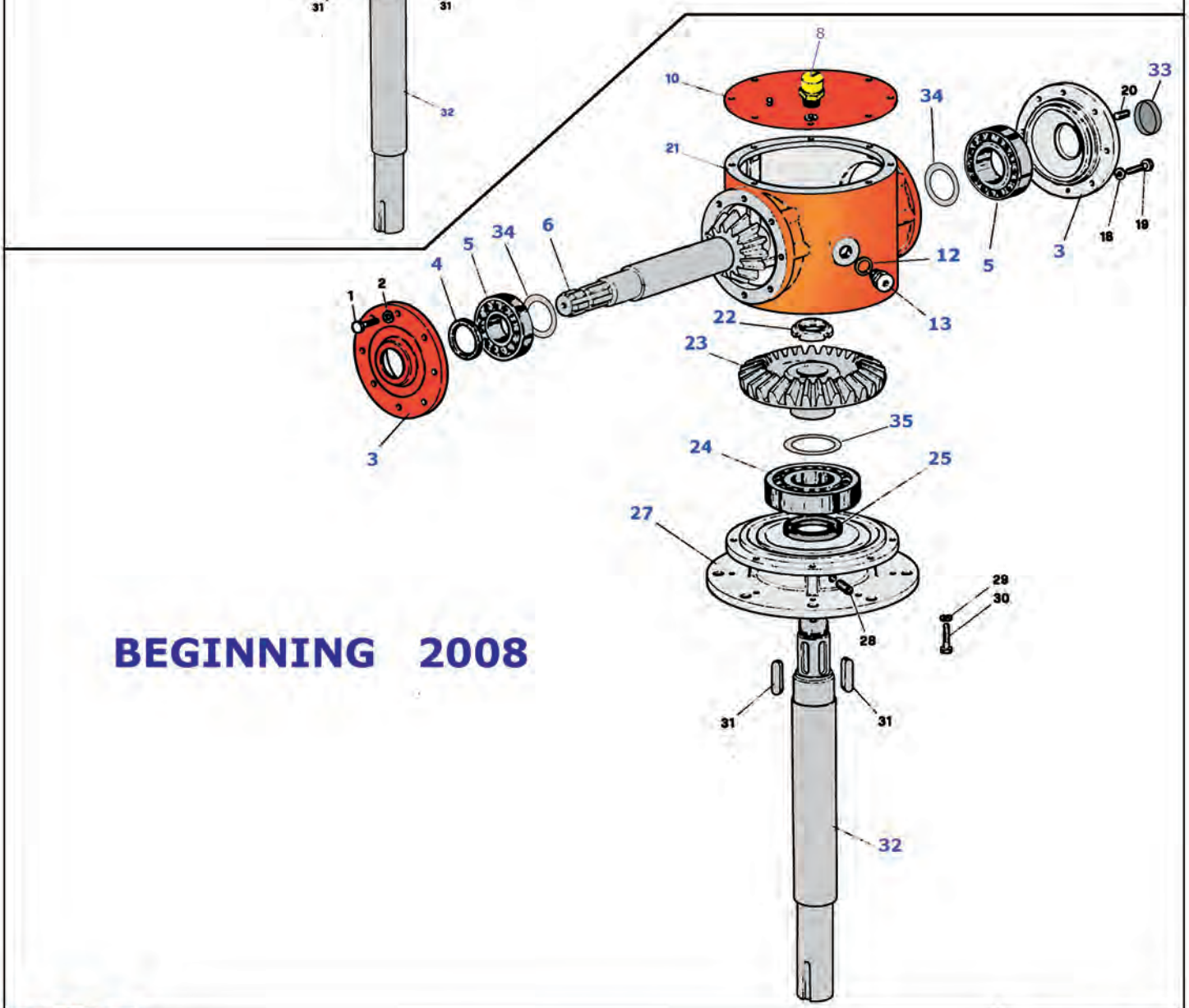
BEGINNING 2008

| | GEARBOX<br>STANDARD LTV 14F | XL-XLM<br>Sheet 1 of 1 | TAB. 8<br>2013 |
|---|---|---|---|

| POS. | DESCRIPTION | UM | Euro € |
|---|---|---|---|
| | **UNTIL 2007** | N | |
| 3 | FRONT COVER | N | 84,49 |
| 4 | SEAL 35x47x7 | N | 6,83 |
| 5 | CONIC BEARING 35x72x18.5 - 30207 | N | 15,45 |
| 6 | SPLINED SHAFT WITH PINION Z12 M6,5 (See BEGINNING 2008) | N | |
| 7-11-16-26 | OILPAPER GASKET | N | |
| 8 | DAIN PLUG Ø 3/8" | N | 16,50 |
| 10 | UPPER COVER | N | 29,23 |
| 12 | COPPER WASHER | N | 0,70 |
| 13 | CAP | N | 1,26 |
| 14 | BEVEL PINION (See BEGINNING 2008) | N | |
| 15 | CONIC BEARING 45x85x20.75 - 30209 | N | 21,03 |
| 17 | REAR COVER (See BEGINNING 2008) | N | |
| 21 | EMPTY MAIN BODY | N | 416,01 |
| 22 | LOCKING RING 35x1.5 KM7 | N | 5,18 |
| 23 | BEVEL GEAR Z 23 M 6,5 | N | 228,53 |
| 24 | BEARING 55x120x29 - 6311 | N | 41,91 |
| 25 | SEAL 55x80x10 (2 PCS.) | N | 9,53 |
| 27 | BOTTOM COVER | N | |
| 32 | VERTICAL SHAFT | N | 248,33 |
| | | | |
| | | | |
| | **BEGINNING 2008** | | |
| 3 | COVER | N | 84,49 |
| 4 | SEAL 35x52x7 | N | 6,83 |
| 5 | CONIC BEARING 35x72x24,5 - 32207 | N | 23,58 |
| 6 | SPLINED SHAFT WITH PINION Z12 M6,5 | N | 484,21 |
| 8 | DAIN PLUG Ø 3/8" | N | 16,50 |
| 10 | UPPER COVER | N | 29,23 |
| 12 | COPPER WASHER | N | 0,70 |
| 13 | CAP | N | 1,26 |
| 21 | EMPTY MAIN BODY | N | 416,01 |
| 22 | LOCKING RING 35x1.5 KM7 | N | 5,18 |
| 23 | BEVEL GEAR Z 23 M 6,5 | N | 228,53 |
| 24 | BEARING 55x120x29 - 6311 | N | 41,91 |
| 25 | SEAL 55x80x10 (2 PCS.) | N | 9,53 |
| 27 | BOTTOM COVER | N | |
| 32 | VERTICAL SHAFT | N | 248,33 |
| 33 | PLUG Ø 52x7 | N | 5,51 |
| 34 | SPACER Ø 35,3x48,0 mm | N | 4,99 |
| 35 | SPACER Ø 55,3x67,7 mm | N | 7,48 |
| | | | |
| | | | |
| | | | |
| A | GEARBOX COMPLETE | N | 1.217,28 |
| | | | |
| | | | |
| | | | |
| | | | |
| | | | |
| | | | |

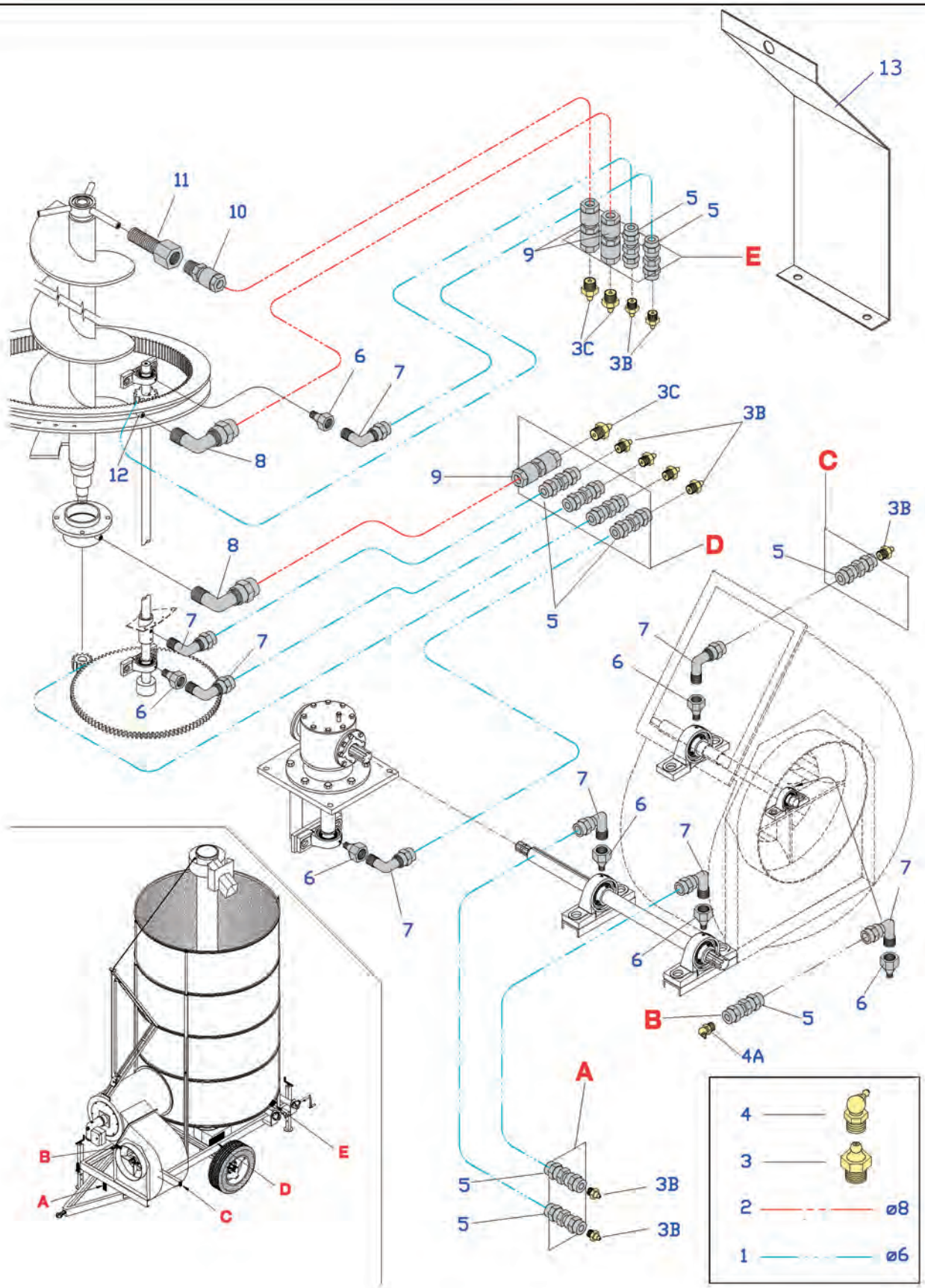


FP PEDROTTI ESSICCATOI

# LUBRIFICATION SYSTEM

TA B 8A
2010

| | LUBRICATION SYSTEM | XL-XLM | TAB. 8A |
|---|---|---|---|
| | | Sheet 1 of 1 | 2013 |

| POS. | DESCRIPTION | UM | Euro € |
|---|---|---|---|
| 1 | COPPER PIPE Ø 6 | Kg | 46,36 |
| 2 | COPPER PIPE Ø 8 | Kg | 44,71 |
| 3A | GREASER M6 | N | 0,58 |
| 3B | GREASER M8 | N | 0,77 |
| 3C | GREASER M10 | N | 0,96 |
| 3D | GREASER 1/4" | N | 1,40 |
| 4A | GREASER 45° M8 | N | 1,12 |
| 4B | GREASER 45* 1/4" | N | 2,07 |
| 5 | DOUBLE NIPPLE Ø 1/8" PIPE ø 6 | N | 3,45 |
| 6 | ADAPTOR | N | 4,80 |
| 7 | CURVED NIPPLE Ø 1/8" PIPE ø 6 | N | 3,00 |
| 7A | HALF NIPPLE Ø 1/8" PIPE ø 6 | N | 2,25 |
| 8 | CURVED NIPPLE Ø 1/4" ø 8 | N | 3,94 |
| 9 | DOUBLE NIPPLE 1/4" ø 8 | N | 4,33 |
| 10 | HALF NIPPLE Ø 1/4" PIPE ø 8 | N | 3,00 |
| 11 | BOLT M12X35 / FEMALE NIPPLE ¼ | N | 7,45 |
| 12 | COUPLING 1/4" L = 25 | N | 1,01 |
| 13 | GREASER PROTECTION | N | 28,69 |
| | | | |
| D | GREASER PLATE | N | 15,61 |
| E | GREASER PLATE | N | 13,88 |

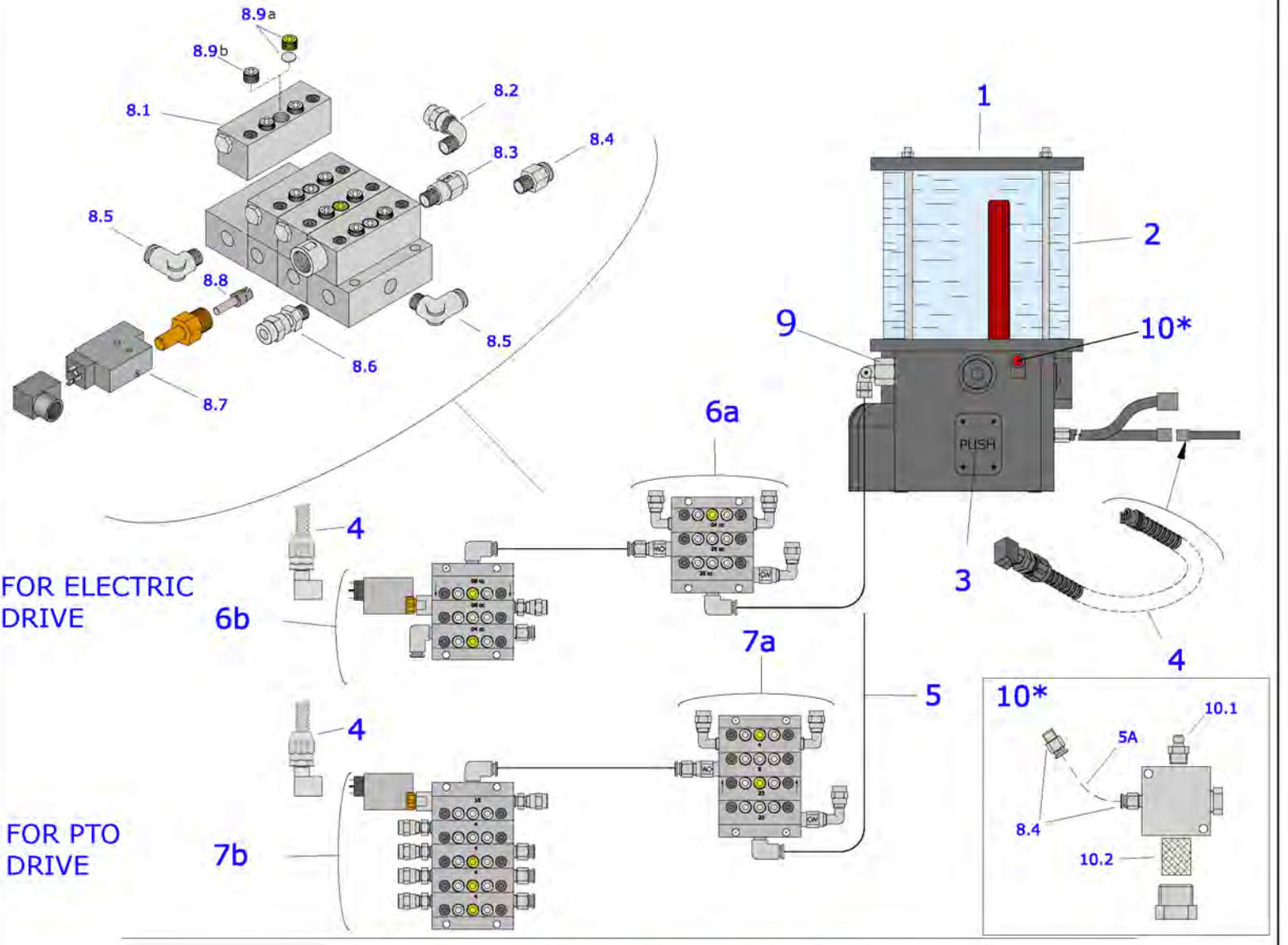


ELECTRIC COMPONENTS INSIDE PANEL
FOR POWER SUPPLY PUMP

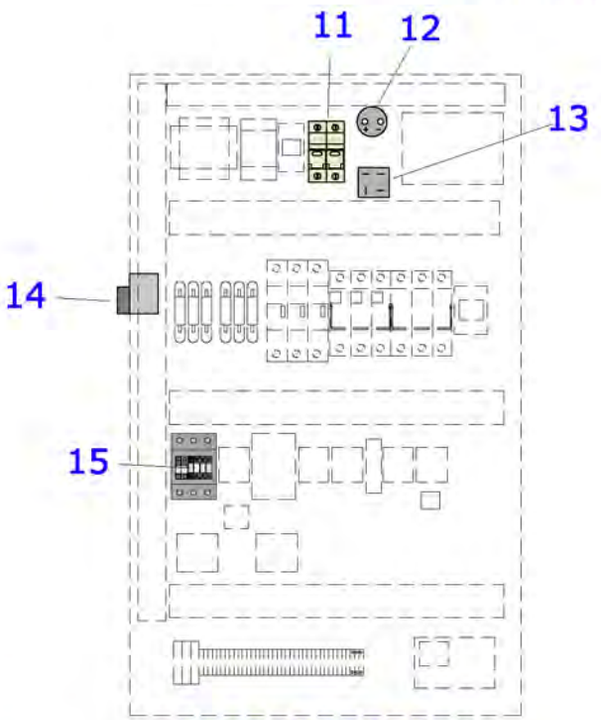


ELECTRIC DRIVE

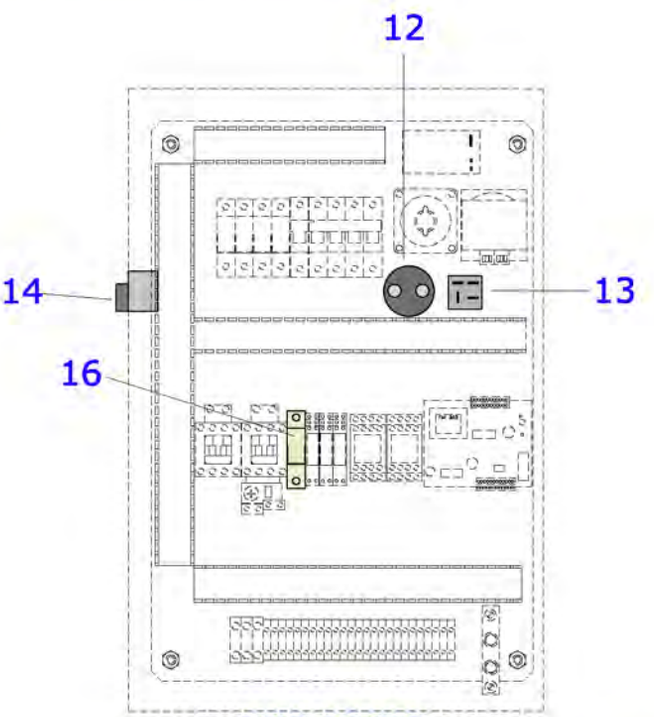


PTO DRIVE

| | AUTOMATIC LUBRICATION SYSTEM | XL-XLM | TAB. 8B |
|---|---|---|---|
| | | Sheet 1 of 1 | 2013 |

| POS. | DESCRIPTION | UM | Euro € |
|---|---|---|---|
| 1 | ELECTRIC GREASE PUMP 24 V 4 Kg WITH TIMER | Kg | 1.782,11 |
| 2 | GREASE TRANSPARENT RESERVOIR FOR ELECTRIC PUMP | Kg | 179,43 |
| 3 | PLUG-IN CARD | N | 268,14 |
| 4 | CONNECTION CABLE FOR MAGNETIC SENSOR | N | 62,68 |
| 5A | NYLON PIPE Ø 6x3 | m | 4,06 |
| 5B | COPPER PIPE Ø 6 | kg | 46,36 |
| 6A | 1° BLOCK OF DISTRIBUTORS C/W CONNECTORS FOR ELECTRIC DRIVE | N | 263,51 |
| 6B | 2° BLOCK OF DISTRIBUTORS C/W CONNECTORS FOR ELECTRIC DRIVE | N | 424,31 |
| 7A | 1° BLOCK OF DISTRIBUTORS C/W CONNECTORS FOR PTO DRIVE | N | 339,35 |
| 7B | 2° BLOCK OF DISTRIBUTORS C/W CONNECTORS FOR PTO DRIVE | N | 573,01 |
| 7B.1 | 2° BLOCK OF DISTRIBUTORS C/W CONNECTORS FOR PTO DRIVE XLM/XL | N | 632,16 |
| 8.1 | DISTRIBUTOR COMPLETE | N | 47,37 |
| 8.2 | CONNECTOR 1/8" 90° FOR COPPER TUBE Ø 6 | N | 3,00 |
| 8.3 | CHECK VALVE Ø 1/8" M-F | N | 9,57 |
| 8.4 | CONNECTOR 1/8" STRAIGHT FOR NYLON PIPE FAST CONNECTION | N | 3,64 |
| 8.5 | CONNECTOR 1/8" 90° FOR NYLON PIPE FAST CONNECTION | N | 5,75 |
| 8.6 | CONNECTOR 1/8" STRAIGHT FOR COPPER PIPE | N | 2,25 |
| 8.7 | MAGNETIC CONTACT | N | 137,97 |
| 8.8 | MAGNET | N | |
| 8.9a | YELLOW ZINC-PLATED DOWEL 1/8" x 8 WITH SEAL DISK | N | 1,00 |
| 8,9b | WHITE ZINC-PLATED DOWEL 1/8" x 8 | N | 1,00 |
| 9 | PUMPING ELEMENT | N | 174,24 |
| 10 | INLET FILTER GROUP | N | |
| 10,1 | GREASER 1/8" | N | |
| 10,2 | CATRIDGE FILTER | N | |
| | | | |
| | | | |
| | | | |
| | | | |
| 11 | BIPOLAR FUSE CARRIER 10x38 | N | 15,73 |
| 11A | FUSE 10x38 4A | N | 2,23 |
| 12 | CONDENSER 10.000 µf 63 V | N | 60,83 |
| 13 | BRIDGE RECTIFIER | N | 23,96 |
| 14 | GREEN PILOT LIGHT | N | 10,88 |
| 15 | AUXILIARY CONTACT | N | 29,90 |
| 16 | UNIPOLAR FUSE CARRIER 10x38 | N | 5,63 |
| 16A | FUSE 10x38 6A | N | 2,23 |
| | | | |
| | | | |
| | | | |
| | | | |
| | | | |
| | | | |
| | | | |
| | | | |
| | | | |
| | | | |
| | | | |
| | | | |
| | | | |

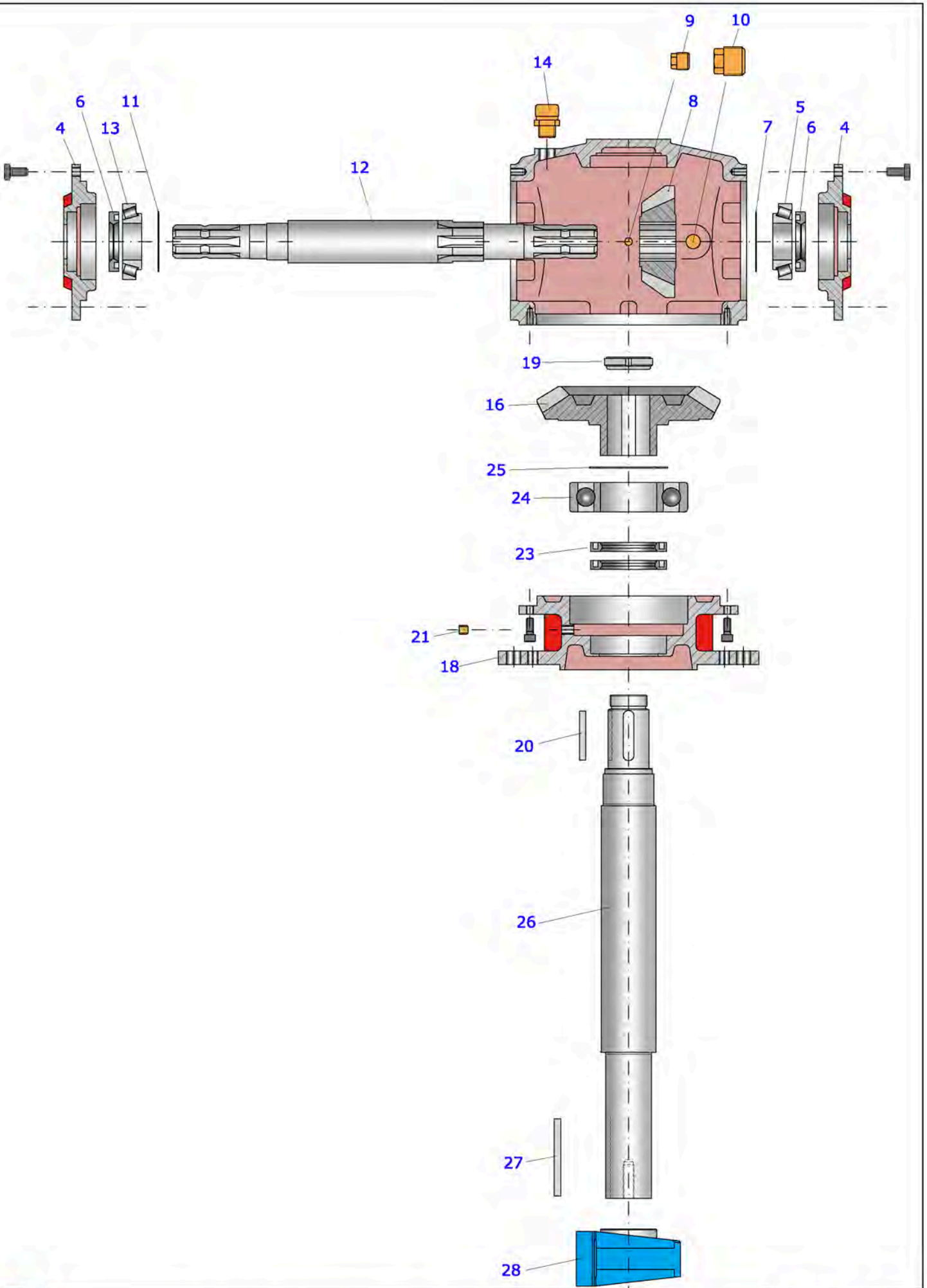


# GEARBOX TV-274A

TAB 8C
2009

FP PEDROTTI
ESSICCATOI

| | GEARBOX<br>TV 274A | XL-XLM<br>Sheet 1 of 1 | TAB. 8C<br>2013 |
|---|---|---|---|

| POS. | DESCRIPTION | UM | Euro € |
|---|---|---|---|
| 4 | OPEN COVER | | 69,59 |
| 5 | TAPER ROLLER BEARING 30307 | | 21,11 |
| 6 | O RING BA 35x62x10 | | 4,99 |
| 7 | ADJUSTMENT TICKNESS 35,3 x 48,0 | | 2,18 |
| 8 | BEVEL PINION Z 15 M 6,9 | | 501,69 |
| 9 | CONIC PLUG C/W HEXAGONAL HEAD 3/8" G | | 1,36 |
| 10 | CONIC PLUG C/W HEXAGONAL HEAD 1/2" G | | 1,80 |
| 11 | ADJUSTMENT TICKNESS 40,3 x 51,5 | | 1,80 |
| 12 | SPLINED THROUGH-SHAFT 1 3/8" | | 243,14 |
| 13 | TAPER ROLLER BEARING 30208 | | 15,93 |
| 14 | DRAIN PLUG 1/2G | | 8,77 |
| 16 | RING BEVEL GEAR Z 29 M 6,9 | | 1.155,06 |
| 18 | EXTENSION | | 889,05 |
| 19 | TREADED SELFLOCKING RING M40x1,5 | | 9,35 |
| 20 | TONGUE UNI 6604 A 12x8x85 | | 1,99 |
| 21 | CONIC PLUG C/W BUILT IN EXAGONAL HEAD 1/4" | | 1,47 |
| 23 | O RING BA 60x80x10 | | 5,98 |
| 24 | BALL BEARING 6312 | | 43,87 |
| 25 | ADJUSTMENT TICKNESS | | 4,99 |
| 26 | VERTICAL SHAFT | | 676,30 |
| 27 | KEY 10X10X50 | | 3,36 |
| 28 | BEARING UCP 210 Ø 50 TOP QUALITY | | 127,57 |
| | | | |
| | | | |
| A | GEARBOX COMPLETE TV 274A | | 1.555,46 |

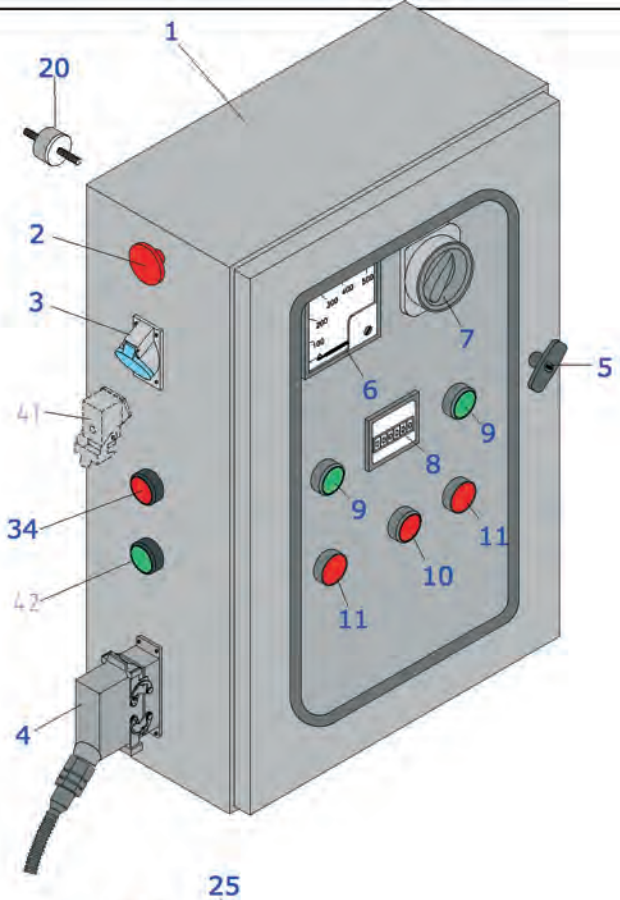
1
20
2
3
41
34
42
4
5
6
7
8
9
9
10
11
11

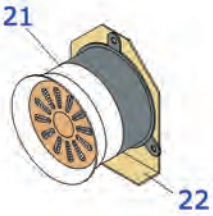
21
22

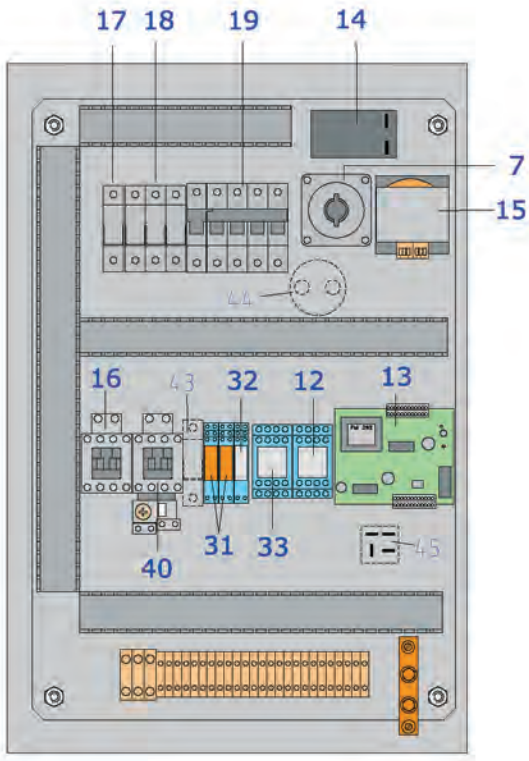
17
18
19
14
7
15
44
16
43
32
12
13
40
31
33
45

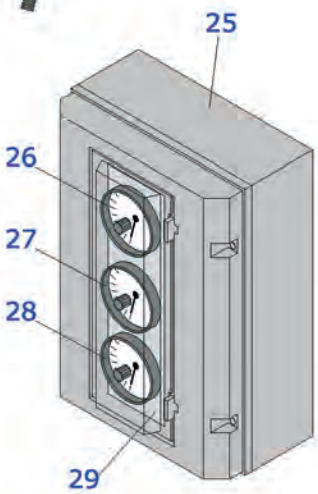
25
26
27
28
29

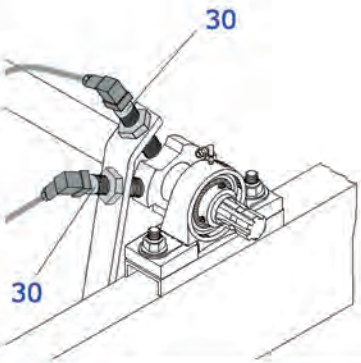
30
30

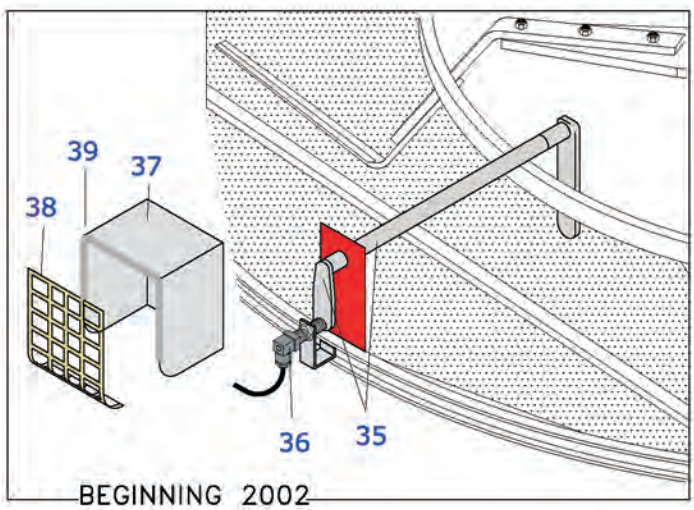
39
37
38
36
35
BEGINNING 2002

| | GENERATOR ELECTRIC PANEL<br>THERMOSTATS - ELECTRICAL ITEMS | XL-XLM<br>Sheet 1 of 1 | TAB. 9A<br>2013 |
|---|---|---|---|

| POS. | DESCRIPTION | UM | Euro € |
|---|---|---|---|
| 1 | CONTROL PANEL EMPTY BOX | N | 633,87 |
| 2 | EMERGENCY STOP BUTTON | N | 20,93 |
| 3 | SINGLE PHASE 220 VOLTS SOCKET | N | 10,14 |
| 4A | MULTIPLUG 10 POINTS CONNECTOR BURNER TO PANE FEMALE | N | 34,82 |
| 4B | MULTIPLUG 10 POINTS CONNECTOR BURNER TO PANE MALE | N | 27,05 |
| 5 | LOCK | N | 49,09 |
| 6 | VOLTMETER 500V | N | 86,39 |
| 7A | LOCKING-DOOR SWITCH (until 2006) | N | 101,38 |
| 7B | LOCKING-DOOR SWITCH (from 2007) | N | 95,63 |
| 8 | HOUR METER | N | 52,60 |
| 9 | GREEN LIGHT BUTTON | N | 20,74 |
| 10 | RED LIGHT BUTTONS | N | 20,74 |
| 11 | RED BUTTON | N | 10,70 |
| 12A | MEMORY RELAY MY2K | N | 91,74 |
| 12B | MEMORY RELAY MY2K SOKET | N | 11,20 |
| 13 | ROTATION CONTROL P/C BOARD EMI 393 | N | 245,70 |
| 14 | ANCILLARY BATTERY 12V | N | 41,35 |
| 15 | TRANSFORMER | N | 66,80 |
| 16 | CONTACTOR SCO3/T (COIL 24V) | N | 29,90 |
| 17 | UNIPOLAR FUSE CARRIER 10x38 | N | 5,63 |
| 17A | FUSES 16 A | N | 2,27 |
| 18 | TRIPOLAR FUSE CARRIER 10X38 | N | 19,03 |
| 18A | FUSES 4 A | N | 2,23 |
| 18B | FUSES 10 A | N | 2,27 |
| 19 | AUTHOMATIC SWITCH 4X16A WITH COIL | N | 107,24 |
| 20 | RUBBER MOUNTING M10 | N | 11,17 |
| 21 | ACOUSTIC ALARM | N | 194,88 |
| 22 | ACOUSTIC ALARM SUPPORT | N | 6,75 |
| 25 | PROTECTION BOX | N | 44,90 |
| 26 | AIR THEMOSTAT 200°C | N | 195,71 |
| 27 | SAFETY THERMOSTAT 200°C | N | 195,71 |
| 28 | CEREAL THERMOSTAT 80°C | N | 197,10 |
| 28A | CEREAL THERMOSTAT 120°C | N | 203,60 |
| 29 | ALLUMINIUM PLATE PROTECTION BOX | N | 13,69 |
| 30 | ROTATION SENSOR (until 2001) | N | 101,38 |
| 31 | SWITCH 24Vac TWO EXCHANGES | N | 12,59 |
| 31A | SOKET FOR SWITCH TWO EXCHANGES | N | 11,11 |
| 32 | SWITCH 12Vdc TWO EXCHANGES | N | 12,23 |
| 33 | SWITCH 12Vdc FOUR EXCHANGES | N | 20,38 |
| 33A | SOKET FOR SWITCH FOUR EXCHANGES | N | 11,67 |
| 34 | DLC RED LIGHT | N | 36,61 |
| 35 | MECCHANICAL KIT FOR DLC | N | 268,43 |
| 36 | SENSOR OF DLC | N | 136,45 |
| 36A | SWITCH OF DLC (BEGINNING 2008) | N | 41,74 |
| 37 | DLC PROTECTION | N | 70,10 |
| 38 | GUARD OF DLC | m | 16,79 |
| 39 | SHEATH PROTECTION | N | 9,67 |
| 40 | CONTACTOR MOTOR DUST EXTRACTOR SC-0/T 24V | N | 35,18 |
| 40A | THERMAL RELAY FOR DUST EXTR. E TKON/T | N | 47,44 |
| 41 | MULTIPLUG 4 POINTS+GROUND CONNECTOR 90° | N | 11,67 |
| 42--45 | SEE TAB. 8B | | |

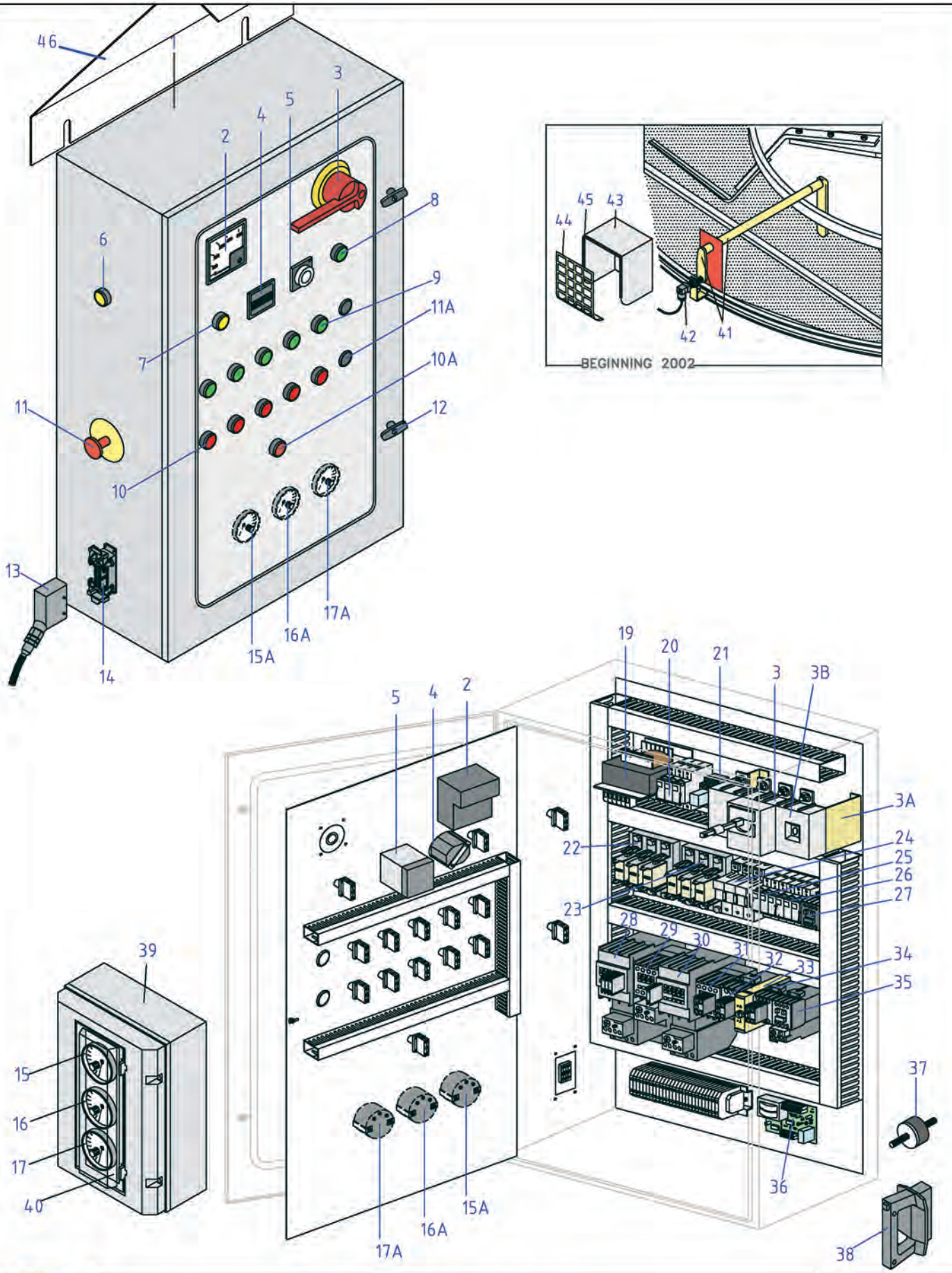


# ELECTRIC PANEL
# (dryers mod.ELECTRIC)

TA B 9B
2010

| | ELECTRIC PANELS<br>ELECTRIC MODEL | XL-XLM<br>Foglio 1 di 2 | TAB. 9B<br>2013 |
|---|---|---|---|

| POS. | DESCRIPTION | UM | Euro € |
|---|---|---|---|
| 1 | ELECTRIC PANEL - EMPTY BOX - | N | 1.092,90 |
| 2 | AMPEROMETER 150/5A 500A or 200/5A | N | 91,25 |
| 2A | AMPEROMETER TRANSFORMER | N | 45,11 |
| 3A | HANDLE ON/OFF GENERAL SWITCH 4x160A | N | 259,95 |
| 3B | HANDLE ON/OFF GENERAL SWITCH 4x250A | N | 340,98 |
| 3.1 | GENERAL SWITCH SUPPORT | N | 11,32 |
| 3.2 | PLEXIGLAS PROTECTING | N | 63,33 |
| 4 | HOURMETER 24 V | N | 52,60 |
| 5 | COOLING TIMER T45 | N | 136,51 |
| 6 | DLC RED LIGHT | N | 36,61 |
| 7 | JELLOW LIGHT "THERMAL OFF" | N | 10,88 |
| 8 | GREEN LIGHT "TENSION ON" | N | 10,88 |
| 9 | GREEN LIGHT BUTTONS | N | 14,11 |
| 10 | RED BUTTONS | N | 10,70 |
| 10A | RED LIGHT BUTTONS | N | 17,95 |
| 11 | EMERGENCY STOP BUTTON (On outer side panel from 1997) | N | 20,93 |
| 11A | PLASTIC PLUG | N | 6,35 |
| 12 | LOCK | N | 49,09 |
| 13 | MULTIPOINTS SOCKET 10P | N | 27,05 |
| 14 | MULTIPOINTS PLUG FROM BURNER TO PANEL 10P | N | 34,82 |
| 15 | AIR THEMOSTAT 200°C | N | 195,71 |
| 15A | AIR THEMOSTAT 200°C LONG PROBE | N | 333,61 |
| 16 | SAFETY THERMOSTAT 200°C | N | 195,71 |
| 16A | SAFETY THERMOSTAT 200°C LONG PROBE | N | 333,61 |
| 17 | CEREAL THERMOSTAT 120°C | N | 203,60 |
| 17.1 | CEREAL THERMOSTAT 80°C | N | 197,10 |
| 17A | CEREAL THERMOSTAT 120°C LONG PROBE | N | 370,11 |
| 17A.1 | CEREAL THERMOSTAT 80°C LONG PROBE | N | 286,89 |
| 19 | TRANSFORMER 250 VA | N | 118,92 |
| 20 | BOX FOR FUSES 10X38 | N | 63,36 |
| 20A | FUSES 10X38 4A AM | N | 2,23 |
| 20B | FUSES 10X38 10A AM | N | 2,27 |
| 21 | MEMORY RELAY MY2K | N | 91,74 |
| 21A | MEMORY RELAY MY2K SOKET | N | 11,20 |
| 22-23 | SUPPORT FOR FUSES NH00 | N | 63,36 |
| 22A | FUSES FAN MOTOR NH00100A -125A - 160A | N | 15,56 |
| 23A | FUSES MOTOR CENTRE AUGER NH00 125A - 160A | N | 15,56 |
| 24 | BOX FOR FUSES 14X51 | N | 50,37 |
| 24A | FUSES MOTOR FILLING AUGER 14x51 40A AM | N | 3,81 |
| 25-26 | BOX FOR FUSES 10X38 | N | 19,03 |
| 25A-26A | FUSES 10X38 10A AM | N | 2,27 |
| 27 | RELAY AUXILIARY SH 4/T | N | 26,85 |
| 28A | CONTACTOR FOR MOTOR CENTRE AUGER SCE4 | N | 274,02 |
| 28A.1 | THERMAL RELAY FOR ABOVE TKE3 | N | 77,98 |
| 28B | CONTACTOR FOR MOTOR CENTRE AUGER SCE5 | N | 347,76 |
| 28B.1 | THERMAL RELAY FOR ABOVE TKE5 | N | 83,68 |
| 28C | CONTACTOR AUXILIARY SZ-A40/T | N | 16,61 |
| 29 | CONTACTOR FOR MOTOR FILLING AUGER SCE2S | N | 149,93 |
| 29A | THERMAL RELAY FOR ABOVE TKE2 | N | 59,80 |
| 29B | CONTACTOR AUXILIARY SZ-A11 | N | 83,68 |
| | | | |

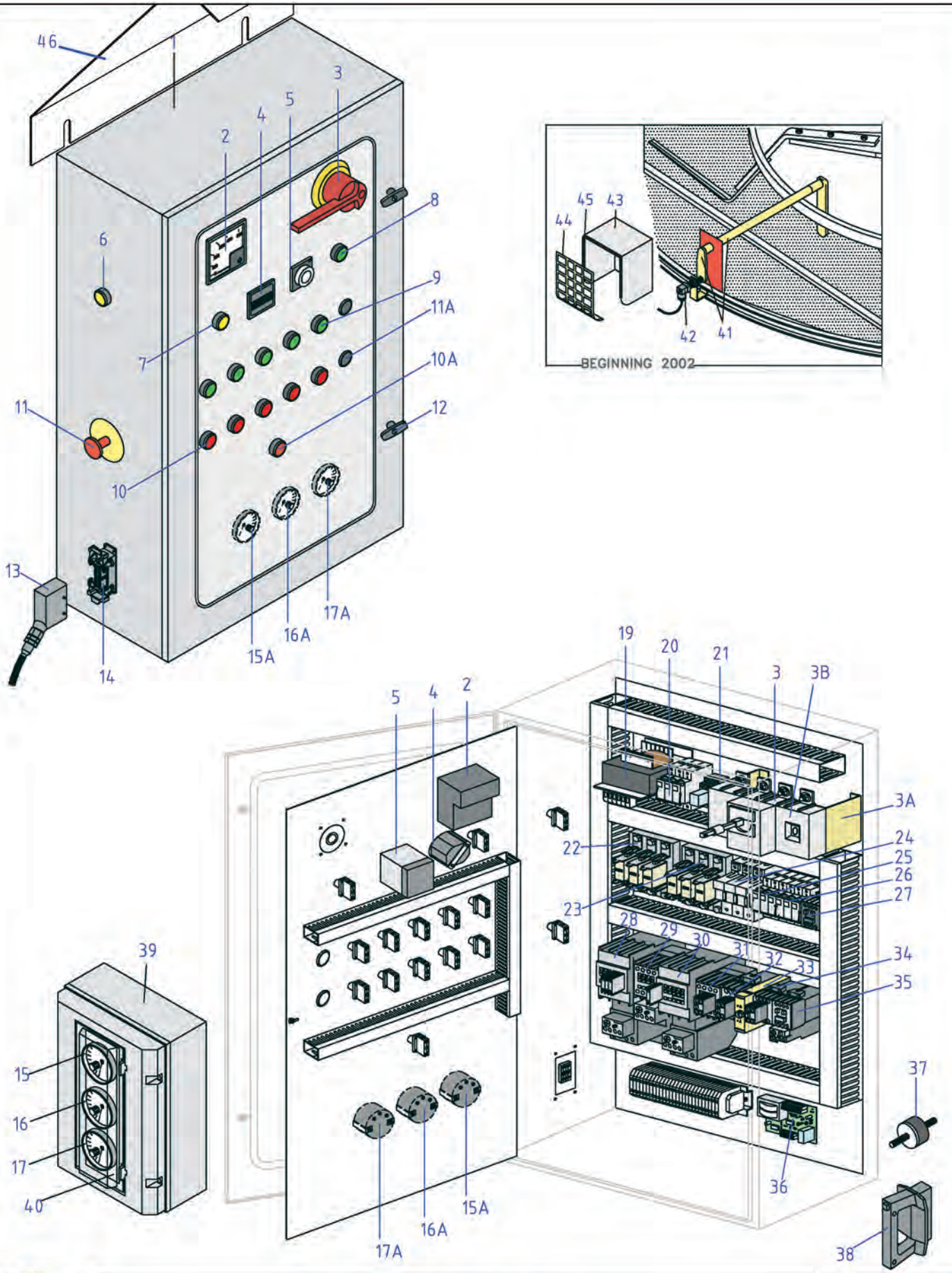


# ELECTRIC PANEL
# (dryers mod.ELECTRIC)

TA B 9B
2010

| | ELECTRIC PANELS<br>ELECTRIC MODEL | XL-XLM<br>Foglio 2 di 2 | TAB. 9B<br>2013 |
|---|---|---|---|

| POS. | DESCRIZIONE | UM | Euro € |
|---|---|---|---|
| | | | |
| 30A | CONTACTORS FOR FAN MOTOR SCE2S 24VAC | N | 149,93 |
| 30A.1 | THERMAL RELAY TKE2 | N | 59,80 |
| 30B | CONTACTORS FOR FAN MOTOR SCE4 24VAC | N | 274,02 |
| 30B.1 | THERMAL RELAY TKE3 | N | 77,98 |
| 30C | CONTACTOR AUXILIARY SZ-A11/T | N | 83,68 |
| 31A | CONTACTORS FOR FAN MOTOR SCE2S 24VAC | N | 149,93 |
| 31B | CONTACTORS FOR FAN MOTOR SCE4 24VAC | N | 274,02 |
| 31C | CONTACTOR AUXILIARY SZA 31 | N | 16,61 |
| 32A | CONTACTORS FOR FAN MOTOR SCE2 24VAC | N | 128,88 |
| 32B | CONTACTORS FOR FAN MOTOR SCE4 24VAC | N | 274,02 |
| 32C | CONTACTOR AUXILIARY SZ-A11/T | N | 14,27 |
| 33 | TIMER DELTA/STAR FOR FAN MOTOR FIBER E 21 | N | 101,48 |
| 34 | CONTACTORS BURNER MOTOR SC-03/T 24V | N | 29,90 |
| 34B | CONTACTOR AUXILIARY SZ-A11/T | N | 14,27 |
| 35 | CONTACTOR MOTOR DUST EXTRACTOR SC-0/T 24V | N | 35,18 |
| 35A | THERMAL RELAY FOR DUST EXTR. E TKON/T | N | 47,81 |
| 36 | ROTATION CONTROL P/C BOARD EMI 393 | N | 245,70 |
| 37 | RUBBER MOUNTING M10 | N | 11,17 |
| 38 | HANDLE FOR FUSE NH00 | N | 26,15 |
| 39 | PROTECTION BOX | N | 44,90 |
| 40 | ALLUMINIUM PLATE PROTECTION BOX | N | 13,69 |
| 41 | MECCHANICAL KIT FOR DLC | N | 268,43 |
| 42 | SENSOR OF DLC | N | 136,45 |
| 42 | SWITCH OF DLC (BEGINNING 2008) | N | 41,74 |
| 43 | DLC PROTECTION | N | 70,10 |
| 44 | GUARD OF DLC | N | 16,79 |
| 45 | SHEATH PROTECTION | m | 9,67 |
| 46 | TOP COVER ELECTRIC PANEL | N | 183,75 |

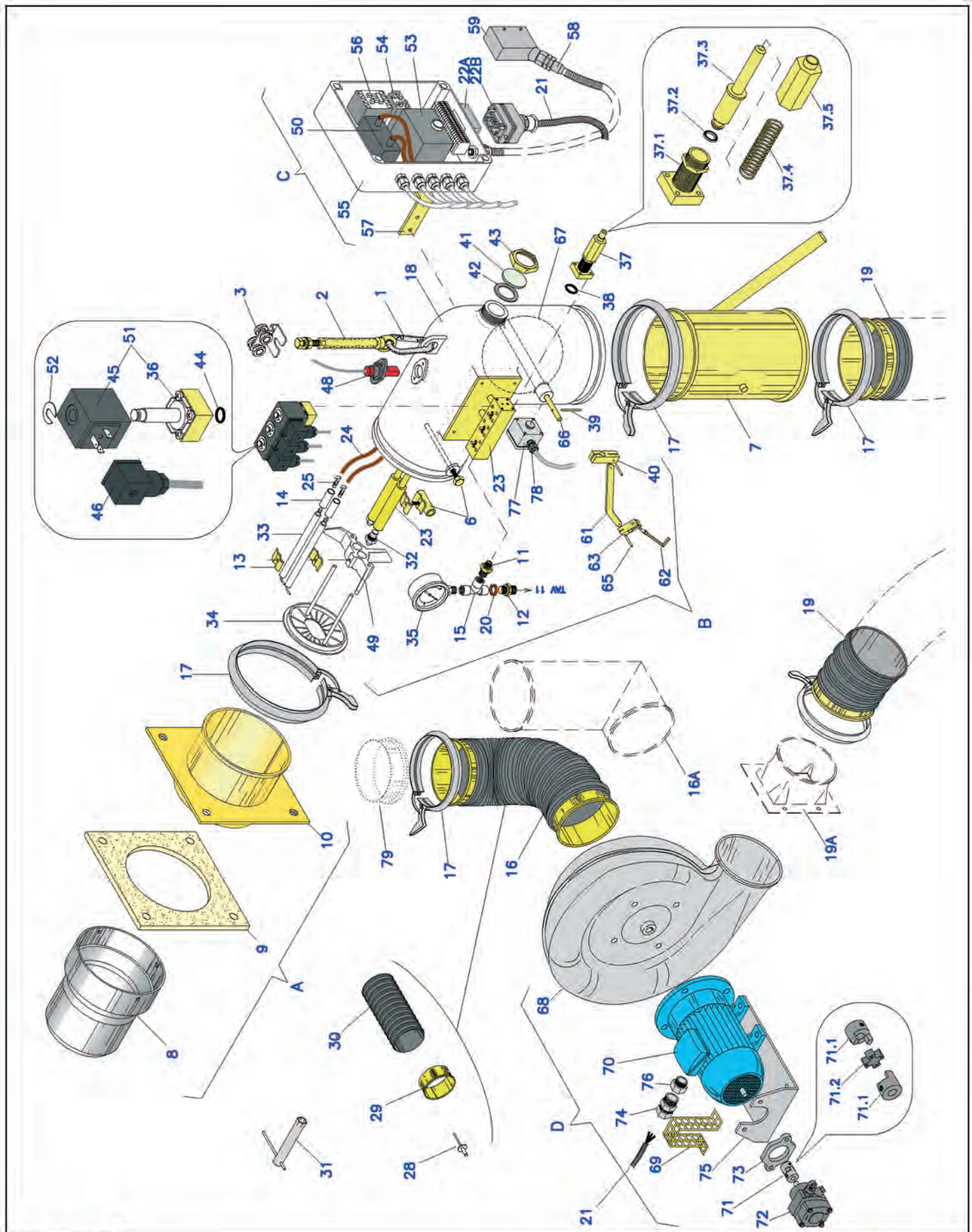
A
B
C
D
1
2
3
6
7
8
9
10
11
12
13
14
15
16
16A
17
18
19
19A
20
21
22A
22B
23
24
25
27
28
29
30
31
32
33
34
35
36
37
37.1
37.2
37.3
37.4
37.5
38
39
40
41
42
43
44
45
46
48
49
50
51
52
53
54
55
56
57
58
59
61
62
63
65
66
67
68
69
70
71
71.1
71.2
72
73
74
75
76
77
78
79

| | "PEDROTTI" BURNER<br>380 VOLTS | XL-XLM<br>Foglio 1 di 2 | TAB. 10A<br>2013 |
|---|---|---|---|

| POS. | DESCRIPTION | UM | Euro € |
|---|---|---|---|
| 1 | GALVANIZED BRAKET Ø 8 | N | 3,39 |
| 2 | SUPPORTING BAR | N | 44,36 |
| 3 | TROLLEY | N | 11,57 |
| 6 | SOLENOIDS HOLDER - NOZZLE PIPES SUPPORT | N | 57,61 |
| 7 | AIR FLAP' Ø 160 | N | 108,77 |
| 8 | BURNER FUNNEL | N | 100,74 |
| 9 | GASKET | N | 34,79 |
| 10 | BURNER SUPPORT PLATE | N | 222,96 |
| 11 | MALE CONNECTOR Ø 1/8-1/4" | N | 1,56 |
| 12 | MALE CONNECTOR 1/4" | N | 1,64 |
| 13 | FIXING BRACKET | N | 3,72 |
| 14 | INSULATED PROTECTION | N | 0,17 |
| 15 | T 1/4" F | N | 4,14 |
| 16 | AIR DUCT FROM MAIN FAN 50 Cm | N | 120,19 |
| 16A | METAL TERMINAL END Ø 160 90° | N | 118,86 |
| 17 | FAST CLIP Ø 160 | N | 32,81 |
| 18 | ALLUMINIUM CASTING | N | 347,60 |
| 19 | AIR DUCT FROM BURNER 110 Cm | N | 155,78 |
| 19A | ADAPTOR FAN VCM - KB | N | 93,87 |
| 20 | COPPER GASKET 1/4" | N | 0,14 |
| 21 | WIRING CABLE CONNEC. IGNITION PANEL TO FUEL MOTOR | N | 87,36 |
| 22 | MULTIPOINTS PLUG 6P M-F COMPLETE | N | 49,65 |
| 22A | MULTIPOINTS PLUG 6P ON BOX | N | 29,27 |
| 22B | MULTIPOINTS PLUG 6P ON CABLE | N | 20,38 |
| 23 | SOLENOIDS HOLDER - NOZZLE PIPES | N | 294,54 |
| 24 | HT CABLE | N | 13,49 |
| 25 | CONNECTING PLUG | N | 0,84 |
| 28 | RIVET | N | 0,12 |
| 29 | METAL TERMINAL END Ø 160 | N | 19,97 |
| 30 | FLEXIBLE HOSE Ø 160 | m | 46,94 |
| 31 | NOZZLE KEY | N | 8,58 |
| 32A | NOZZLE 60° UNTIL 8,5 gph | N | 17,34 |
| 32B | NOZZLE 60° BEGINNING 8,5 gph | N | 33,89 |
| 33 | ELECTROD | N | 12,78 |
| 34 | AIR DEFLECTOR BIG | N | 98,92 |
| 35 | FUEL PRESSURE GAUGE | N | 14,60 |
| 36 | SOLENOID | N | 79,03 |
| 37 | SLIDING PISTON 2ND FLAME ADJUSTEMENT | N | 77,13 |
| 37.2 | INTERNAL SEAL FOR SLIDING PISTON 2ND FLAME | N | 4,34 |
| 38 | "OR" SEAL FOR SLIDING PISTON 2ND FLAME | N | 0,15 |
| 39 | PIN Ø 3 L=40 | N | 0,20 |
| 40 | LEVER | N | 15,01 |
| 41 | GLASS | N | 2,58 |
| 42 | GASKET Ø 1"1/4 | N | 0,46 |
| 43 | FIXING NUT Ø 1"1/4 | N | 2,93 |
| 44 | "OR" SEAL FOR BOTTOM SOLENOID | N | 0,11 |
| 45 | SOLENOID COIL | N | 27,25 |
| 46 | SOLENOID CONNECTOR | N | 3,65 |
| 48 | PHOTOCELL | N | 20,37 |
| 49 | ELECTRODS SUPPORT | N | 80,67 |
| 50 | IGNITION TRANSFORMER | N | 40,26 |

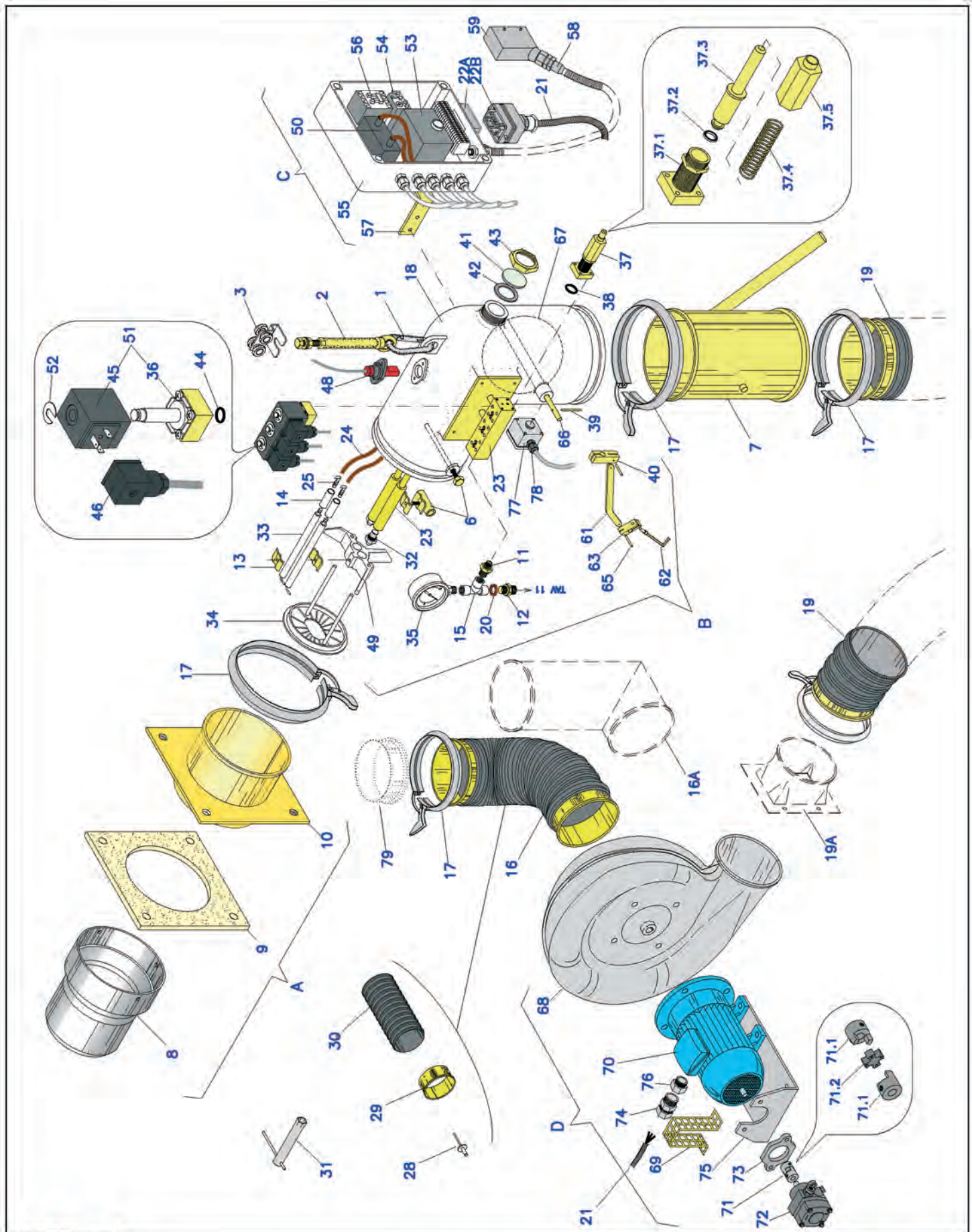
A
B
C
D
1
2
3
6
7
8
9
10
11
12
13
14
15
16
16A
17
18
19
19A
20
21
22A
22B
23
24
25
27
28
29
30
31
32
33
34
35
36
37
37.1
37.2
37.3
37.4
37.5
38
39
40
41
42
43
44
45
46
48
49
50
51
52
53
54
55
56
57
58
59
61
62
63
65
66
67
68
69
70
71
71.1
71.2
72
73
74
75
76
77
78
79

| | "PEDROTTI" BURNER | XL-XLM | TAB. 10A |
|---|---|---|---|
| | 380 VOLTS | Sheet 2 of 2 | 2013 |

| POS. | DESCRIPTION | UM | Euro € |
|---|---|---|---|
| 51 | SOLENOID COIL AND SOLENOID BODY | N | 106,27 |
| 52 | CIRCLIP | N | |
| 53 | CONTROL BOX BRAHMA GF2 OR GF3 | N | 91,94 |
| 53A | CONTROL BOX BRAHMA GF2 SOCKET | N | 9,67 |
| 54 | THERMAL RELAY TKON/T | N | 47,44 |
| 55 | IGNITION BOX | N | 38,43 |
| 56 | CONTACTOR SCO3T 220V | N | 29,90 |
| 57 | IGNITION BOX SUPPORT | N | 47,20 |
| 58 | CABLE FOR ELECTRIC PANEL | N | |
| 59 | MULTIPOINTS SOCKET 10P | N | 27,05 |
| 61 | LEVER OPERATING AIR FLAP FOR 2ND FLAME ADJUSTEMENT | N | 18,59 |
| 62 | LOKING KEY ADJUSTAMENT 1.ST FLAME | N | 9,54 |
| 63 | LEVER | N | 14,57 |
| 65 | PIN Ø L=20 | N | 0,24 |
| 66 | AIR FLAP SHAFT | N | 28,50 |
| 67 | FLAP | N | 19,41 |
| 68 | COMPLET FAN VCM 402 | N | 780,37 |
| 69 | PROTECTION GARD | N | 23,29 |
| 70 | ELECTRIC MOTOR1,5 KW (HP 2), TWIN SHAFT | N | 450,34 |
| 71 | DRIVING JOINT | N | 51,82 |
| 71.1 | BODY OF DRIVING JOINT | N | 21,24 |
| 71.2 | RUBBER OF DRIVING JOINT | N | 9,34 |
| 72 | FUEL PUMP SUNTEC AJ6CC | N | 402,41 |
| 73 | FUEL PUMP SPACER | N | 23,49 |
| 74 | FITTING Pg 16 | N | 1,22 |
| 75 | FIXING PLATE | N | 78,49 |
| 76 | REDUCTION M20X1,5 - Pg 16 | N | 6,60 |
| 77 | SAFETY THERMOSTAT TH4 | N | 49,45 |
| 78 | FITTING Pg 7 | N | 1,70 |
| 79 | WELDING METAL TERMINAL END | N | 30,36 |
| | | | |
| A | BURNER SUPPORT | N | 401,65 |
| B | FULL BURNER (WITHOUT FUEL PUMP-MOTOR-FAN) | N | 3.064,26 |
| C | IGNITION PANEL FULLY ASSEMBLED | N | 771,73 |
| D | FUEL PUMP - MOTOR 1HP- FAN | N | 2.089,65 |
| E | BURNER FULLY ASSEMBLED | N | 6.310,59 |

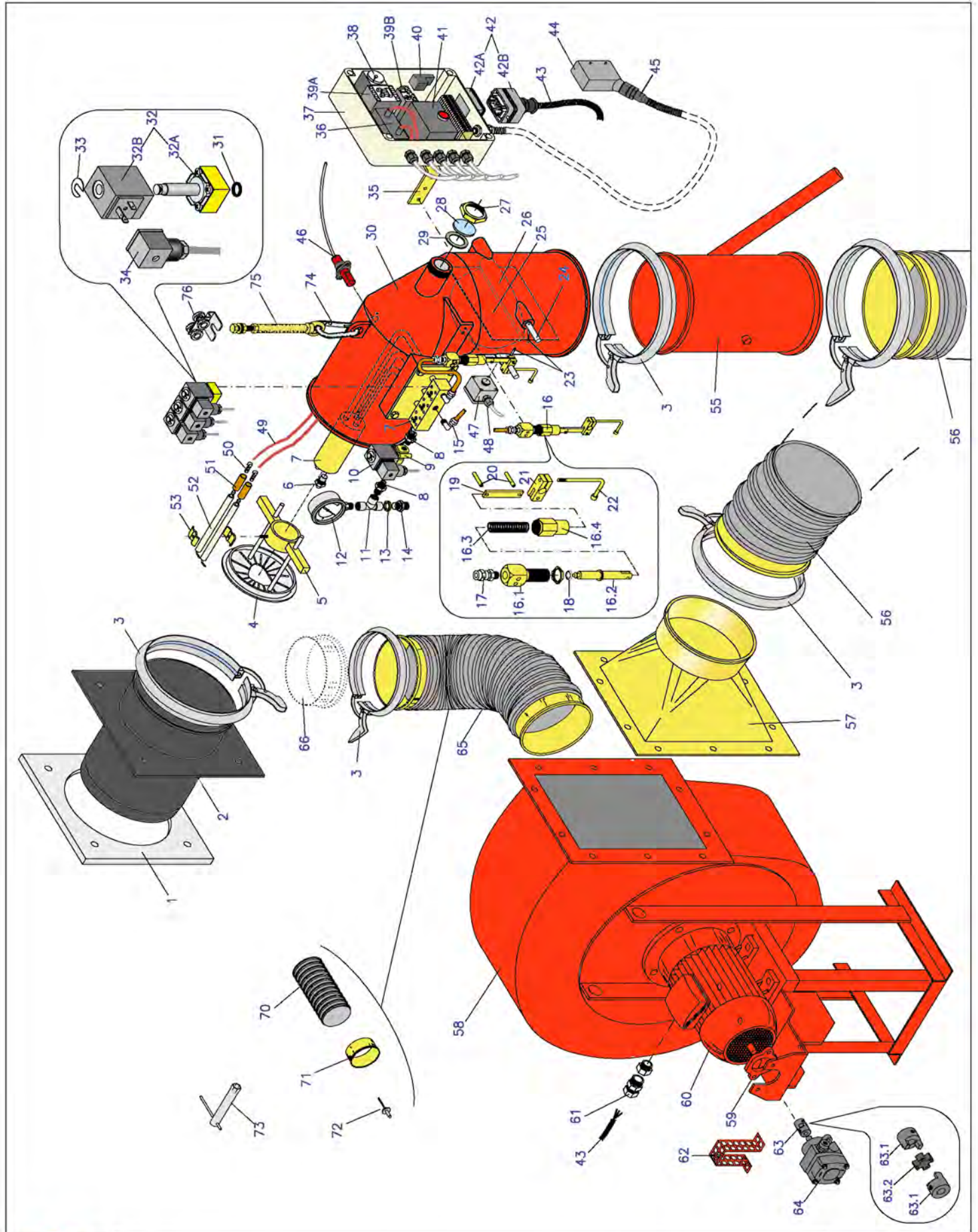


FP PEDROTTI ESSICCATOI

# "PEDROTTI" BURNER TRIPLE STAGE

TAB. 10C
2007

| | "PEDROTTI" BURNER TRIPLE STAGE<br>380 VOLTS | XL-XLM<br>Foglio 1 di 2 | TAB. 10C<br>2013 |
|---|---|---|---|

| POS. | DESCRIPTION | UM | Euro € |
|---|---|---|---|
| 1 | GASKET | N | 40,42 |
| 2 | BURNER SUPPORT PLATE | N | 385,92 |
| 3 | FAST CLIP Ø 200 | N | 35,58 |
| 4 | AIR DEFLECTOR | N | 144,72 |
| 5 | ELECTRODS SUPPORT | N | 114,72 |
| 6A | NOZZLE 60° UNTIL 10,5 gph | N | 17,34 |
| 6B | NOZZLE 60° BEGINNING 8,5 gph | N | 33,89 |
| 7 | SOLENOIDS HOLDER - NOZZLE PIPES | N | 354,62 |
| 8 | MALE CONNECTOR Ø 1/8-1/4" | N | 1,56 |
| 9 | SOLENOID | N | 80,14 |
| 10 | SOLENOID COIL | N | |
| 11 | T 1/4" F | N | 4,14 |
| 12 | FUEL PRESSURE GAUGE | N | 14,60 |
| 13 | COPPER GASKET 1/4" | N | 0,14 |
| 14 | MALE CONNECTOR 1/4" | N | 1,64 |
| 15 | CURVED NIPPLE Ø 1/4" ø 8 | N | 3,00 |
| 16 | SLIDING PISTON 2ND AND 3RD FLAME ADJUSTEMENT | N | 77,14 |
| 17 | HALF NIPPLE Ø 1/8" PIPE ø 6 | N | 2,25 |
| 18 | INTERNAL SEAL FOR SLIDING PISTON 2ND FLAME | N | 4,34 |
| 19 | LEVER OPERATING AIR FLAP FOR 2ND/3RD FLAME ADJUSTEMENT | N | 18,59 |
| 20 | PIN Ø L=20 | N | 0,24 |
| 21 | LEVER | N | 14,57 |
| 22 | LOKING KEY ADJUSTAMENT 1.ST FLAME | N | 9,54 |
| 23 | PIN Ø 3 L=40 | N | 0,20 |
| 24 | AIR FLAP SHAFT | N | 37,29 |
| 25 | FLAP 2ND FLAME | N | 28,82 |
| 26 | FLAP 3RD FLAME | N | 28,82 |
| 27 | FIXING NUT Ø 1"1/4 | N | 2,93 |
| 28 | GLASS | N | 2,58 |
| 29 | GASKET Ø 1"1/4 | N | 0,46 |
| 30 | BODY OF BURNER | N | 900,77 |
| 31 | "OR" SEAL FOR BOTTOM SOLENOID | N | 0,11 |
| 32 | SOLENOID COIL AND SOLENOID BODY | N | 106,27 |
| 32A | SOLENOID | N | 79,03 |
| 32B | SOLENOID COIL | N | 27,25 |
| 34 | SOLENOID CONNECTOR | N | 3,65 |
| 35 | IGNITION BOX SUPPORT | N | 47,20 |
| 36 | IGNITION TRANSFORMER | N | 40,26 |
| 37 | IGNITION BOX | N | 38,43 |
| 38 | TIMER TF 24 220 V | N | 69,17 |
| 39A | CONTACTOR SCO3T 220V | N | 29,90 |
| 39B | THERMAL RELAY TKON/T | N | 47,44 |
| 40 | 2ND FLAME SWITCH | N | 13,14 |
| 41 | CONTROL BOX GF3 | N | 91,94 |
| 42 | MULTIPOINTS PLUG 6P M-F COMPLETE | N | 49,65 |
| 42A | MULTIPOINTS PLUG 6P ON BOX | N | 29,27 |
| 42B | MULTIPOINTS PLUG 6P ON CABLE | N | 20,38 |
| 43 | WIRING CABLE CONNEC. IGNITION PANEL TO FUEL MOTOR | N | 90,41 |
| 44 | MULTIPOINTS SOCKET 10P | N | 27,05 |
| 46 | PHOTOCELL | N | 20,37 |
| 47 | SAFETY THERMOSTAT TH4 | N | 49,45 |

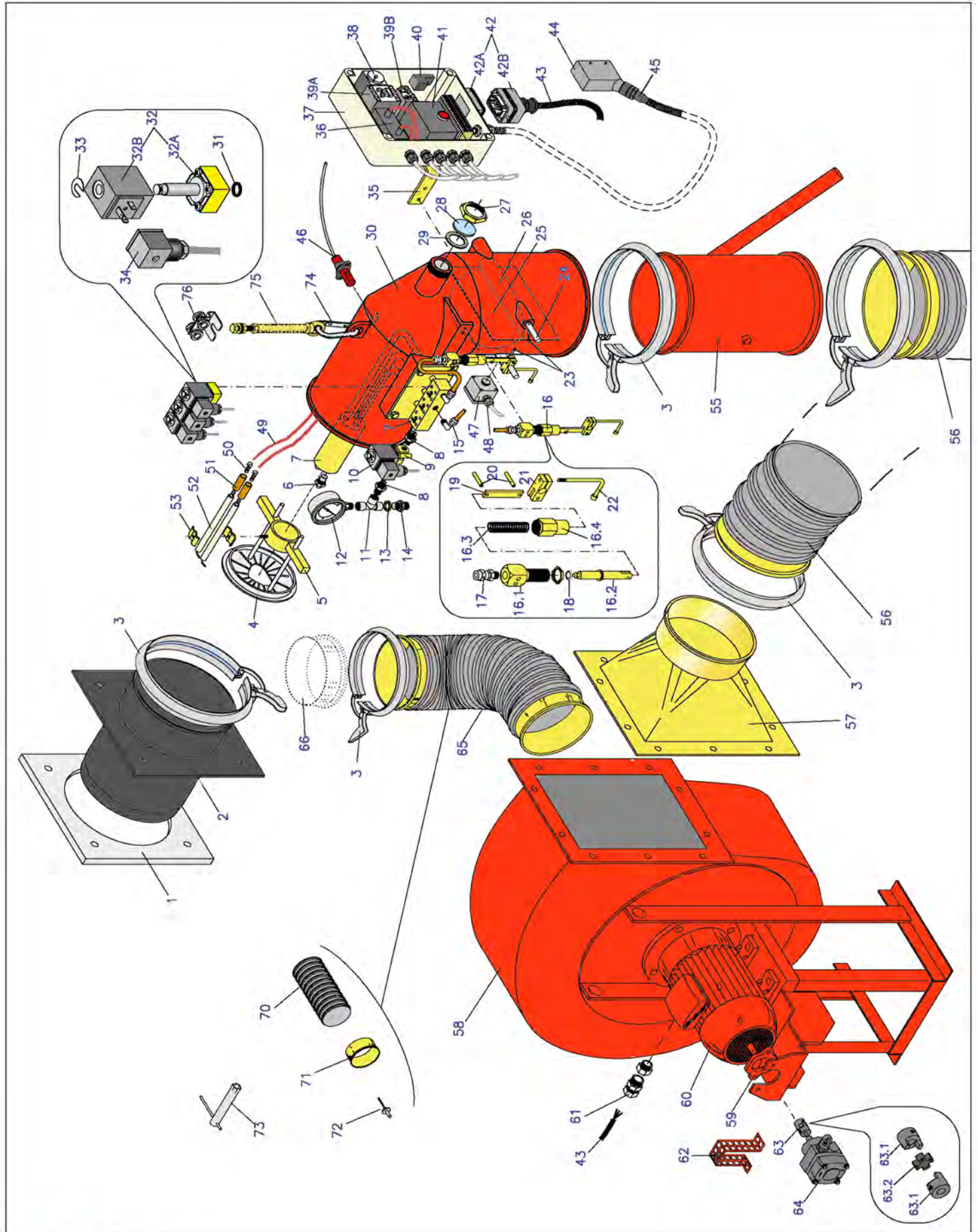


FP PEDROTTI ESSICCATOI

# "PEDROTTI" BURNER TRIPLE STAGE

TAB. 10C
2007

| | "PEDROTTI" BURNER TRIPLE STAGE<br>380 VOLTS | XL-XLM<br>Sheet 2 of 2 | TAB. 10C<br>2013 |
|---|---|---|---|

| POS. | DESCRIPTION | UM | Euro € |
|---|---|---|---|
| 48 | FITTING Pg 7 | N | 1,70 |
| 49 | HT CABLE | N | 13,49 |
| 50 | CONNECTING PLUG | N | 0,84 |
| 51 | INSULATED PROTECTION | N | 0,17 |
| 52 | ELECTROD | N | 12,78 |
| 53 | FIXING BRACKET | N | 3,72 |
| 55 | AIR FLAP' Ø 200 | N | 115,01 |
| 56 | AIR DUCT FROM BURNER | N | 269,47 |
| 57 | REDUCTION FAN | N | 179,18 |
| 58 | COMPLET FAN 3 HP | N | 986,49 |
| 59 | FUEL PUMP SPACER | N | 23,49 |
| 60 | ELECTRIC MOTOR 2,2 KW (HP 3), TWIN SHAFT | N | 472,62 |
| 61 | REDUCTION M20X1,5 - Pg 16 | N | 1,22 |
| 62 | PROTECTION GARD | N | 23,29 |
| 63 | DRIVING JOINT | N | 51,82 |
| 63.1 | BODY OF DRIVING JOINT | N | 21,24 |
| 63.2 | RUBBER OF DRIVING JOINT | N | 9,34 |
| 64 | FUEL PUMP SUNTEC AJ7CC | N | 541,84 |
| 65 | AIR DUCT FROM MAIN FAN | N | 188,01 |
| 70 | FLEXIBLE HOSE Ø 200 | m | 67,89 |
| 71 | METAL TERMINAL END Ø 160 | N | 21,33 |
| 72 | RIVET | N | 0,12 |
| 73 | NOZZLE KEY | N | 8,58 |
| 74 | GALVANIZED BRAKET Ø 8 | N | 3,39 |
| 75 | SUPPORTING BAR | N | 44,36 |
| 76 | TROLLEY | N | 11,57 |
| | | | |
| | | | |
| | | | |
| | | | |
| | | | |
| A | BURNER SUPPORT (Pos.1-2) | N | 427,38 |
| B | FULL BURNER TRIPLE STAGE (from pos.4 to pos. 53) | N | 4.691,61 |
| C | FUEL PUMP - MOTOR 3HP- FAN (from pos. 57 to pos. 64) | N | 2.571,95 |
| D | BURNER TRIPLE STAGE FULLY ASSEMBLED (A+B+C) | N | 8.536,23 |

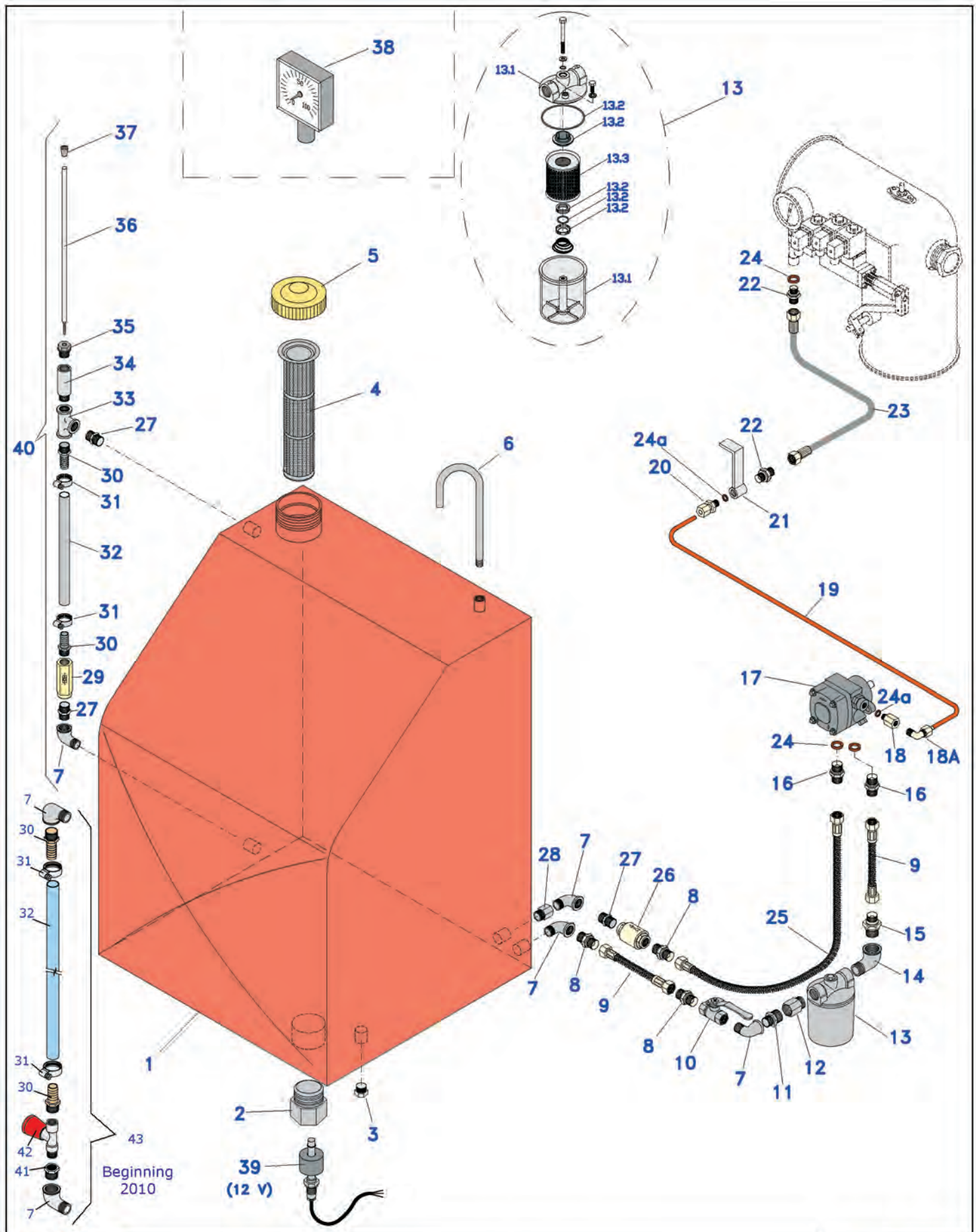


FP PEDROTTI ESSICCATOI

# FUEL PLANT SYSTEM

TAB 11
2010

| FUEL PLANT SYSTEM | XL-XLM | TAB. 11 |
|---|---|---|
| | Sheet 1 of 1 | 2013 |

| POS. | DESCRIPTION | UM | Euro € |
|---|---|---|---|
| 1 | FUEL TANK XLM | N | 1.417,63 |
| 2 | PLUG 1"1/2 | N | 4,30 |
| 3 | PLUG 1/2" | N | 1,37 |
| 4 | ENTRY FUEL TANK FILTER | N | 60,66 |
| 5 | FUEL TANK CAP | N | 27,45 |
| 6 | EXSAUST | N | 23,43 |
| 7 | BREATHER | N | 2,08 |
| 8 | MALE CONNECTOR 3/8" COUNTERSINK | N | 2,74 |
| 9 | FUEL FLEXIBLE HOSES 3/8" L=80 Cm | N | 19,81 |
| 10 | BALL VALVE ON/OFF 3/8" | N | 10,42 |
| 11 | MALE CONNECTOR 3/8"-1/2" | N | 3,23 |
| 12 | EXSTENSION | N | 1,30 |
| 13A | MAIN FILTER COMPLET | N | 44,17 |
| 13B | FILTER C/W FUEL PRE-HEATING | N | 169,18 |
| 13C | LARGE FILTER C/W FUEL PRE-HEATING FOR MOD. XL | N | 401,87 |
| 13,1 | EMPTY MAIN BODY FILTER | N | 27,45 |
| 13,2 | SEAL KIT MAIN FILTER | N | 9,56 |
| 13,3A | FILTER ONLY | N | 16,90 |
| 13,3B | FILTER ONLY PRE-HEATING | N | 23,54 |
| 14 | CURVE | N | 2,08 |
| 15 | MALE CONNECTOR 3/8-1/2 COUNTERSINK | N | 3,23 |
| 16 | MALE CONNECTOR 1/4-3/8 COUNTERSINK | N | 2,56 |
| 17A | FUEL PUMP SUNTEC AJ6CC | N | 402,41 |
| 17B | FUEL PUMP SUNTEC J7CC | N | 541,84 |
| 18 | EXSTENSION Ø 1/8" L=20 MF | Kg | 1,35 |
| 18A | FITTING 1/8" 90° FOR COPPER PIPE ø8 | N | 5,90 |
| 19 | COPPER PIPE Ø 8 | N | 44,71 |
| 20 | FITTING 1/4" FOR COPPER PIPE ø8 | N | 2,96 |
| 21 | COUPLING 1/4" | N | 14,58 |
| 22 | MALE CONNECTOR 1/4" COUNTERSINK | N | 1,64 |
| 23 | HIGH PRESSURE FUEL RUBBER HOSE 1/4" L=100 Cm | N | 21,55 |
| 24 | COPPER GASKET 1/4" | N | 0,63 |
| 24A | COPPER GASKET 1/8" | N | 0,18 |
| 25 | FUEL FLEXIBLE HOSES 3/8" L=180 Cm | N | 44,08 |
| 26 | NON RETURN VALVE 3/8"(EUROPA) | N | 13,34 |
| 27 | MALE CONNECTOR 3/8" | N | 1,22 |
| 28 | EXTENSION | N | 1,47 |
| 29 | NON RETURN VALVE 3/8" | N | 33,99 |
| 30 | RUBBER FIXING | N | 2,63 |
| 31 | FIXING CLIP | m | 2,12 |
| 32 | FUEL LEVEL PIPE | N | 3,76 |
| 33 | T 3/8" F | N | 2,62 |
| 34 | EXTENSION | N | 19,94 |
| 35 | PLASTIC PLUG 3/8" | N | 5,18 |
| 36-37 | LEVEL ROD | N | 11,23 |
| 38 | LEVEL GAUGE (WHEN FITTED) | N | 113,76 |
| 39 | SAFETY SWITCH MIN. LEVEL (only 12V) | N | 137,46 |
| 40 | KIT FUEL LEVEL | N | 77,40 |
| 41 | REDUCTION 3/8"-1/4" | N | 1,12 |
| 42 | FUEL LEVEL TAP | N | 36,50 |
| 43 | KIT FUEL LEVEL 2010 | N | 68,64 |

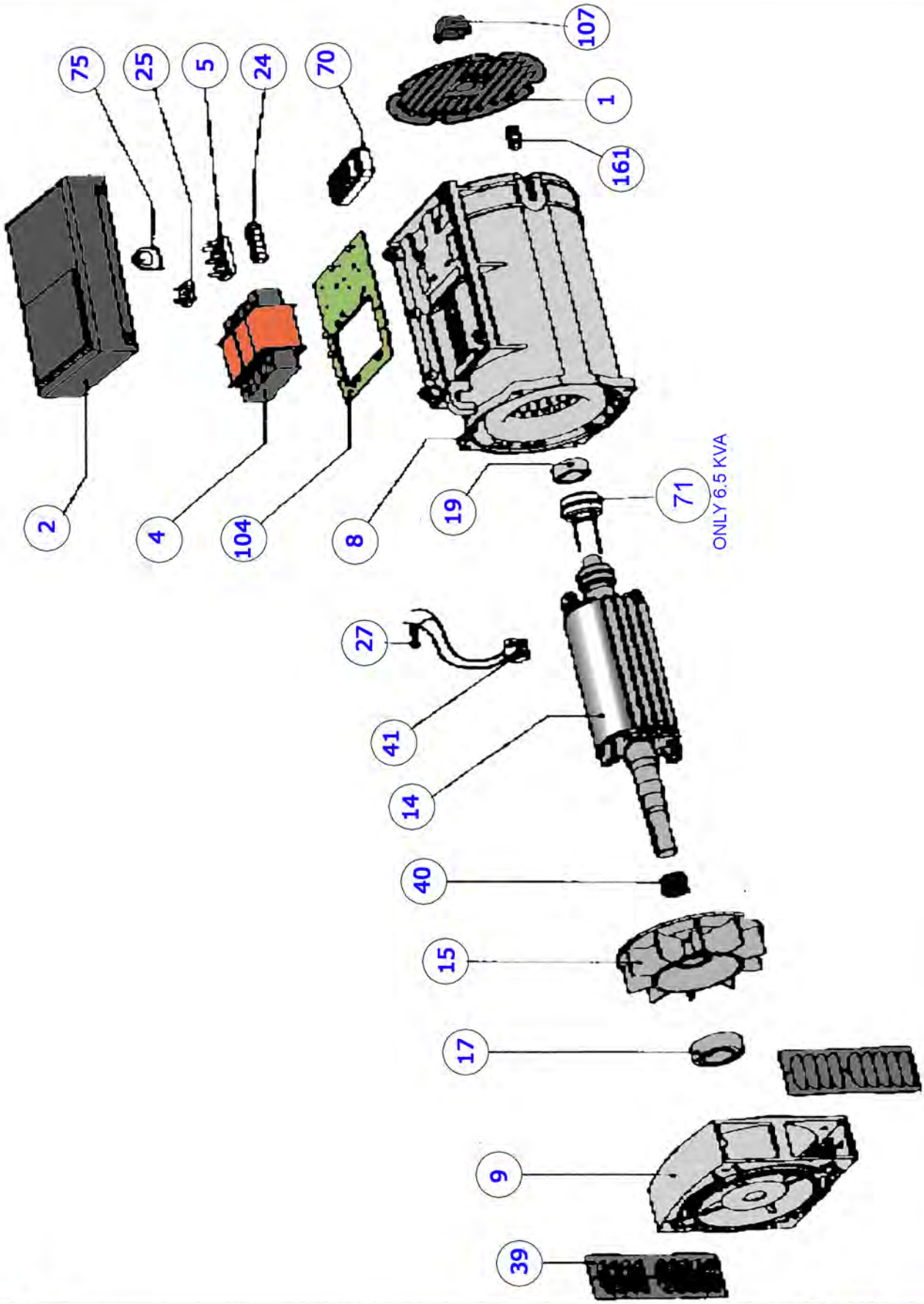


# GENERATOR

TAB. 12
2007

| | SPARE PARTS<br>GENERATOR | XL-XLM<br>Sheet 1 of 1 | TAB. 12<br>2013 |
|---|---|---|---|

| POS. | DESCRIPTION | UM | Euro € |
|---|---|---|---|
| | **SERIE TR1 6,5 KVA** | | |
| 1 | REAR GRID | N | 7,25 |
| 2 | TERMINAL BOX LID | N | 30,17 |
| 4 | REGULATING TRANSFORMER | N | 232,04 |
| 5 | TERMINAL BOARD | N | 10,65 |
| 8 | FRAME AND STATOR | N | 837,20 |
| 9 | DRIVE AND BRACKET | N | 87,14 |
| 14 | ROTOR ASSY | N | 682,44 |
| 15 | FAN | N | 14,29 |
| 17 | FRONT BEARING | N | 24,33 |
| 19 | REAR BEARING | N | 29,18 |
| 24 | AUXILIARY TERMINAL BOARD | N | 10,47 |
| 25 | RECTIFYNG 1 PHASE BRIDGE | N | 46,09 |
| 27 | VARISTOR | N | 5,03 |
| 39 | PROTECTION SCREEN | N | 8,63 |
| 40 | FIXING RING | N | 2,52 |
| 41 | BRUSH GEAR ASSEMBLY | N | 43,00 |
| 70 | RADIO INTERFERENCE SUPPRESSOR | N | 387,21 |
| 71 | SLIP RING | N | 45,68 |
| 75 | CABLE GROMMET | N | 1,91 |
| 104 | COMPONENT HOLDING PANEL | N | 33,01 |
| 107 | GRID RUBBERCAP | N | 5,03 |
| 161 | RUBBER CAP | N | 0,91 |
| | | | |
| | | | |
| | | | |
| | **SERIE TR2 12,5 KVA** | | |
| 1 | REAR GRID | N | 9,44 |
| 2 | TERMINAL BOX LID | N | 30,17 |
| 4 | REGULATING TRANSFORMER | N | 263,82 |
| 5 | TERMINAL BOARD | N | 10,65 |
| 8 | FRAME AND STATOR | N | 1.040,46 |
| 9 | DRIVE AND BRACKET | N | 86,34 |
| 14 | ROTOR ASSY | N | 929,57 |
| 15 | FAN | N | 27,97 |
| 17 | FRONT BEARING | N | 41,06 |
| 19 | REAR BEARING | N | 24,15 |
| 24 | AUXILIARY TERMINAL BOARD | N | 10,47 |
| 25 | RECTIFYNG 1 PHASE BRIDGE | N | 46,09 |
| 27 | VARISTOR | N | 5,03 |
| 39 | PROTECTION SCREEN | N | 9,26 |
| 40 | FIXING RING | N | 6,84 |
| 41 | BRUSH GEAR ASSEMBLY | N | 43,00 |
| 70 | RADIO INTERFERENCE SUPPRESSOR | N | 387,21 |
| 75 | CABLE GROMMET | N | 1,91 |
| 104 | COMPONENT HOLDING PANEL | N | 33,01 |
| 107 | GRID RUBBERCAP | N | 5,03 |
| 161 | RUBBER CAP | N | 0,91 |
| | | | |
| | | | |
| | | | |

ESSICCATOI

# DESACHARGING CHUTE

TAB. 13
2012

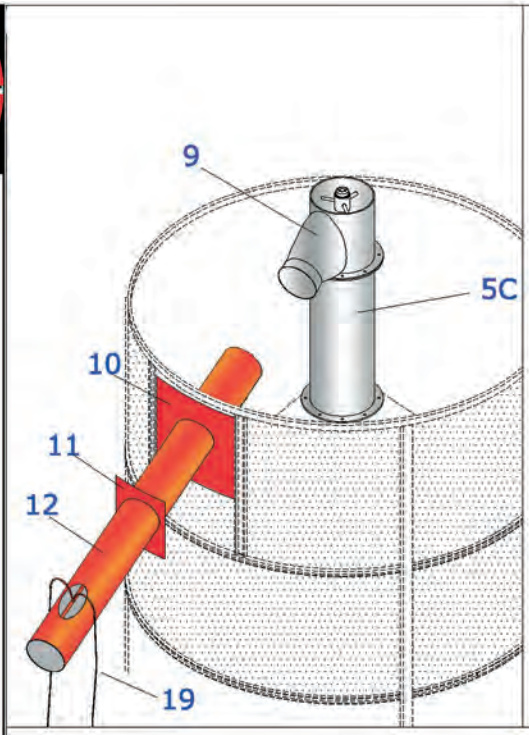


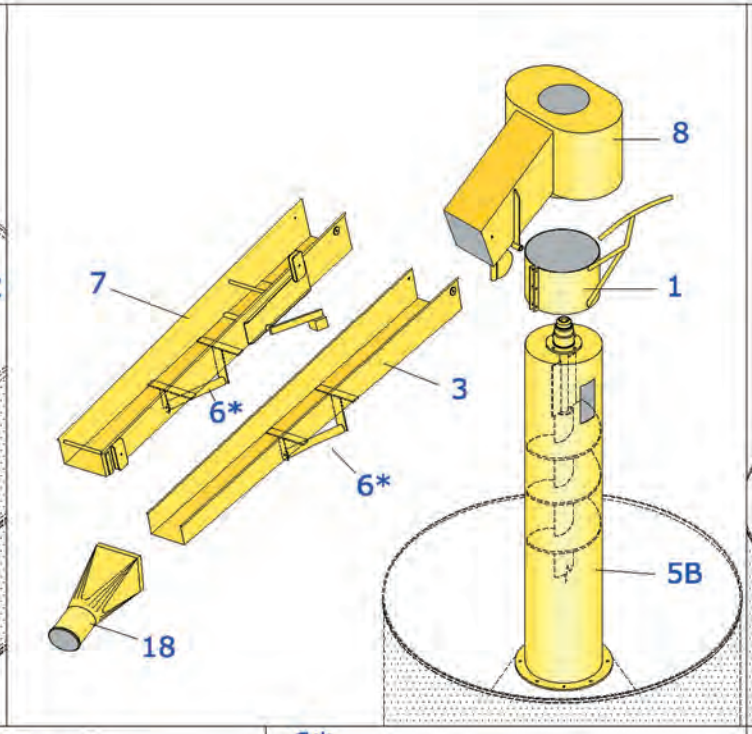


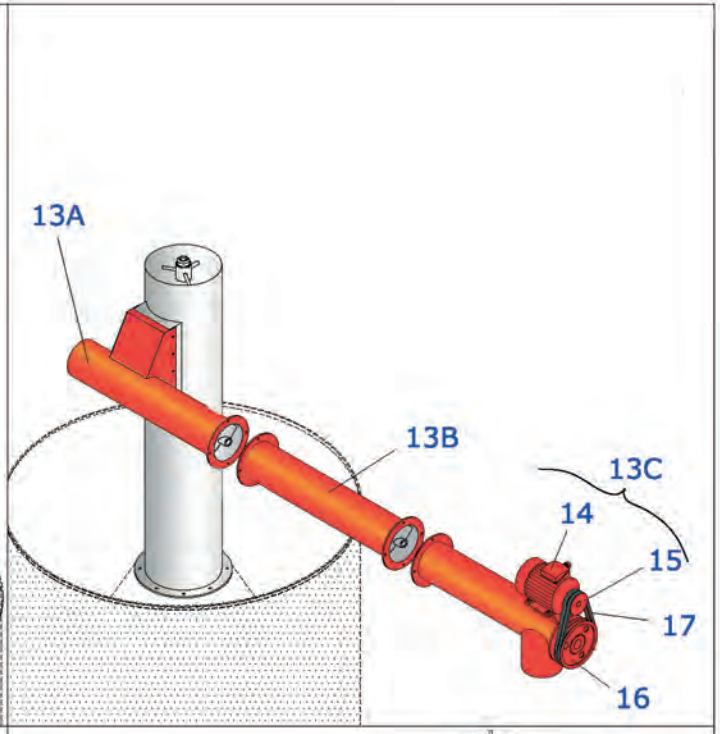


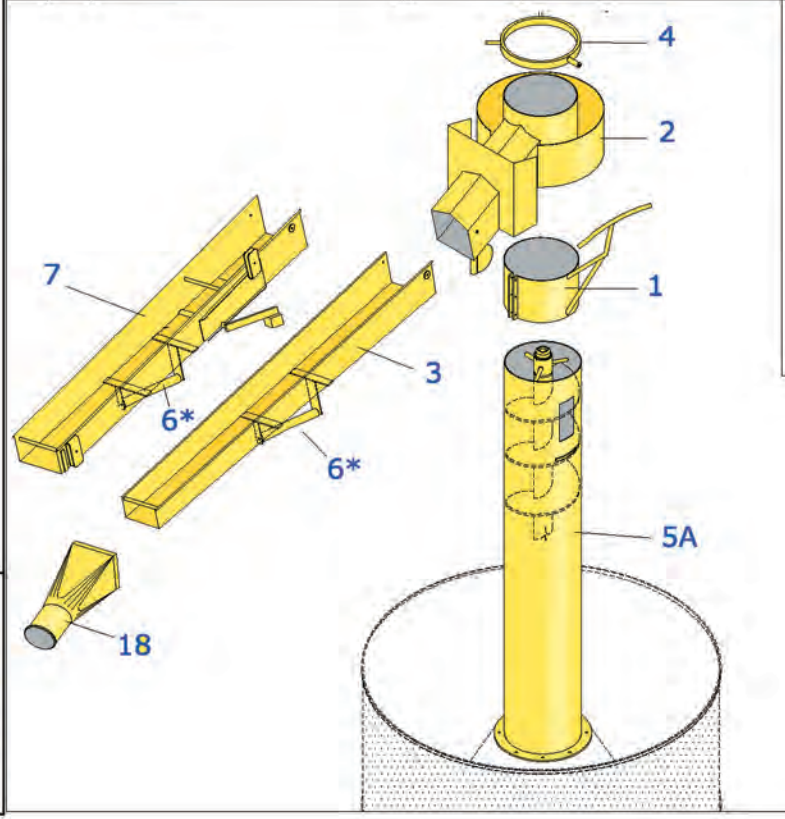


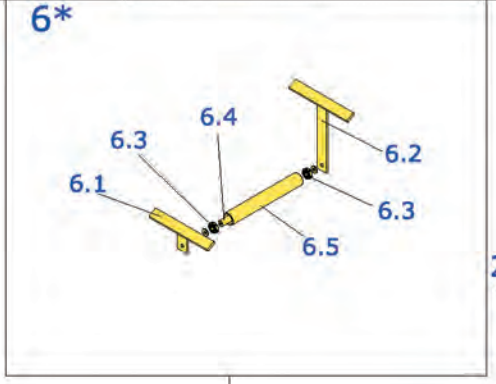


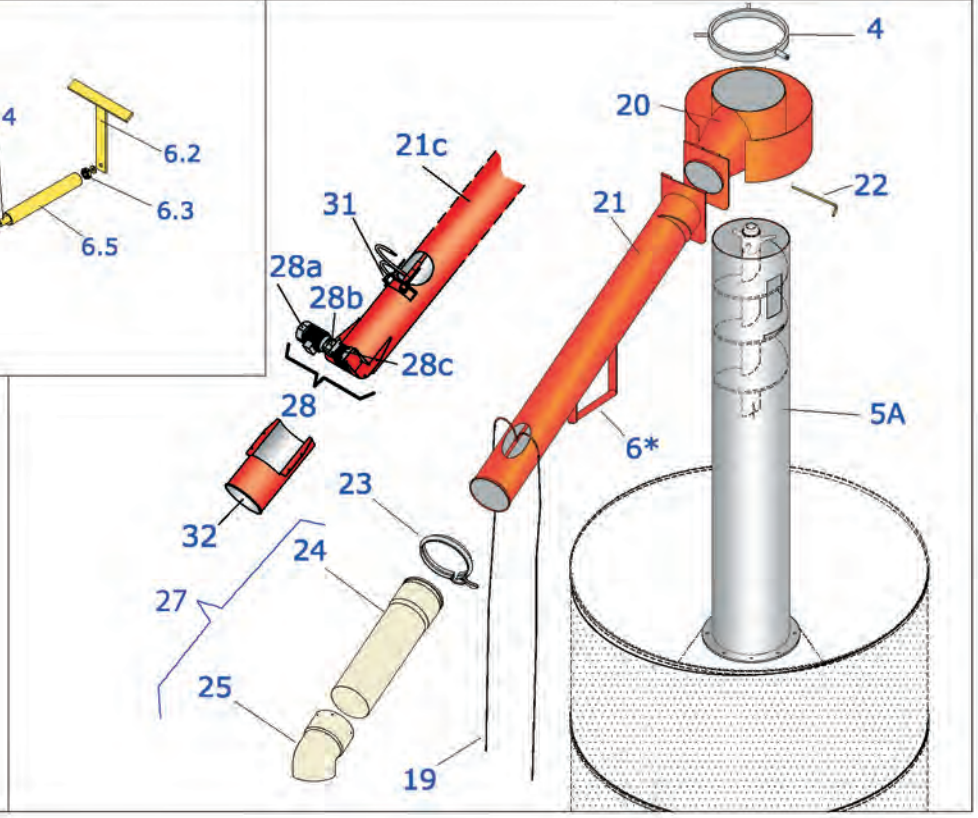

| | DESACHARGING CHUTE<br>DUST-EXTRACTOR | XL-XLM<br>Sheet 1 of 1 | TAB. 13<br>2013 |
|---|---|---|---|

| POS. | DESCRIPTION | UM | Euro € |
|---|---|---|---|
| 2 | ROTATING TOP HAT | N | 801,24 |
| 3 | DESACHARGING CHUTE WITH ROLLER Ø 360 | N | 390,62 |
| 3A | DESACHARGING CHUTE | N | 246,43 |
| 4A | HEAD EXTRACTOR FIXING SUPPORT Ø 360 | N | 178,23 |
| 4B | HEAD EXTRACTOR FIXING SUPPORT Ø 450 | N | 183,65 |
| 5A | SEE "TAB. 00" (TUBES FOR CENTRE AUGER "C") | | |
| 5B | SEE "TAB. 00" (TUBES FOR CENTRE AUGER "B") | | |
| 5C | SEE "TAB. 00" (TUBES FOR CENTRE AUGER "D") | | |
| 6 | GUIDE ROLLER FOR DESCHARGING CHUTE | N | 125,10 |
| 6.1-6.2 | ROLLER SUPPORT | N | 91,98 |
| 6.3 | BEARING 6004 2RS | N | 4,20 |
| 6.4 | ROLLER PIN | N | 23,71 |
| 6.5 | ROLLER BODY | N | 23,73 |
| 9A | SINGLE FIX TOP HAT Ø 360 | N | 646,52 |
| 9A.1 | SINGLE FIX TOP HAT Ø 450 | N | 704,38 |
| 9B | DOUBLE FIX TOP HAT Ø 360 | N | 883,84 |
| 9B.1 | DOUBLE FIX TOP HAT Ø 450 | N | 924,30 |
| 10 | FIXING PLATE | N | 74,67 |
| 11 | WELDED FIXING PLATE | N | 47,68 |
| 12.1 | UNLOADIN PIPE Ø 250 L=2800 | N | 619,37 |
| 12.2 | UNLOADIN PIPE Ø 250 L=3450 | N | 683,48 |
| 13A.1 | CROSS AUGER - INITIAL SECTION 2m | N | 1.096,10 |
| 13A.2 | CROSS AUGER - INITIAL SECTION 3m | N | 1.171,91 |
| 13B.1 | CROSS AUGER - INTERMEDIATE SECTION L=1m | N | 813,87 |
| 13B.2 | CROSS AUGER - INTERMEDIATE SECTION L=2m | N | 881,38 |
| 13B.3 | CROSS AUGER - INTERMEDIATE SECTION L=3m | N | 957,19 |
| 13C | CROSS AUGER - TERMINAL SECTION | N | 2.893,09 |
| 14 | ELECTRIC MOTOR | N | 890,60 |
| 15 | PULLEY A 90 3 RACES | N | 55,77 |
| 16 | PULLEY A 250 3 RACES | N | 112,88 |
| 17 | BELTS A 44 TOP QUALITY | N | 15,84 |
| 18 | ADAPTOR | N | 218,90 |
| 19 | ROPE | m | 2,58 |
| 20A | ROTATING TOP HAT FOR PIPE Ø 250 Ø360 | N | 448,41 |
| 20B | ROTATING TOP HAT FOR PIPE Ø 250 Ø450 | N | 470,31 |
| 21 | ROTATING UNLOADIN PIPE Ø 250 L=2800 XL-XLM | N | 950,82 |
| 22 | PIN Ø 18 | N | 15,55 |
| 23 | FAST CLIP Ø 250 | N | 53,73 |
| 24 | METAL TERMINAL END Ø 250 | N | 25,46 |
| 25 | PVC HOSE SECTION Ø 250 L=1m | N | 40,19 |
| 26 | PVC CURVE 45° Ø 250 M-F | N | 76,65 |
| 27 | EXTENTION ADAPTOR ZINC-PLATED | N | 184,72 |
| | | | |
| | | | |
| | | | |
| | | | |
| | | | |
| | | | |
| | | | |
| | | | |
| | | | |

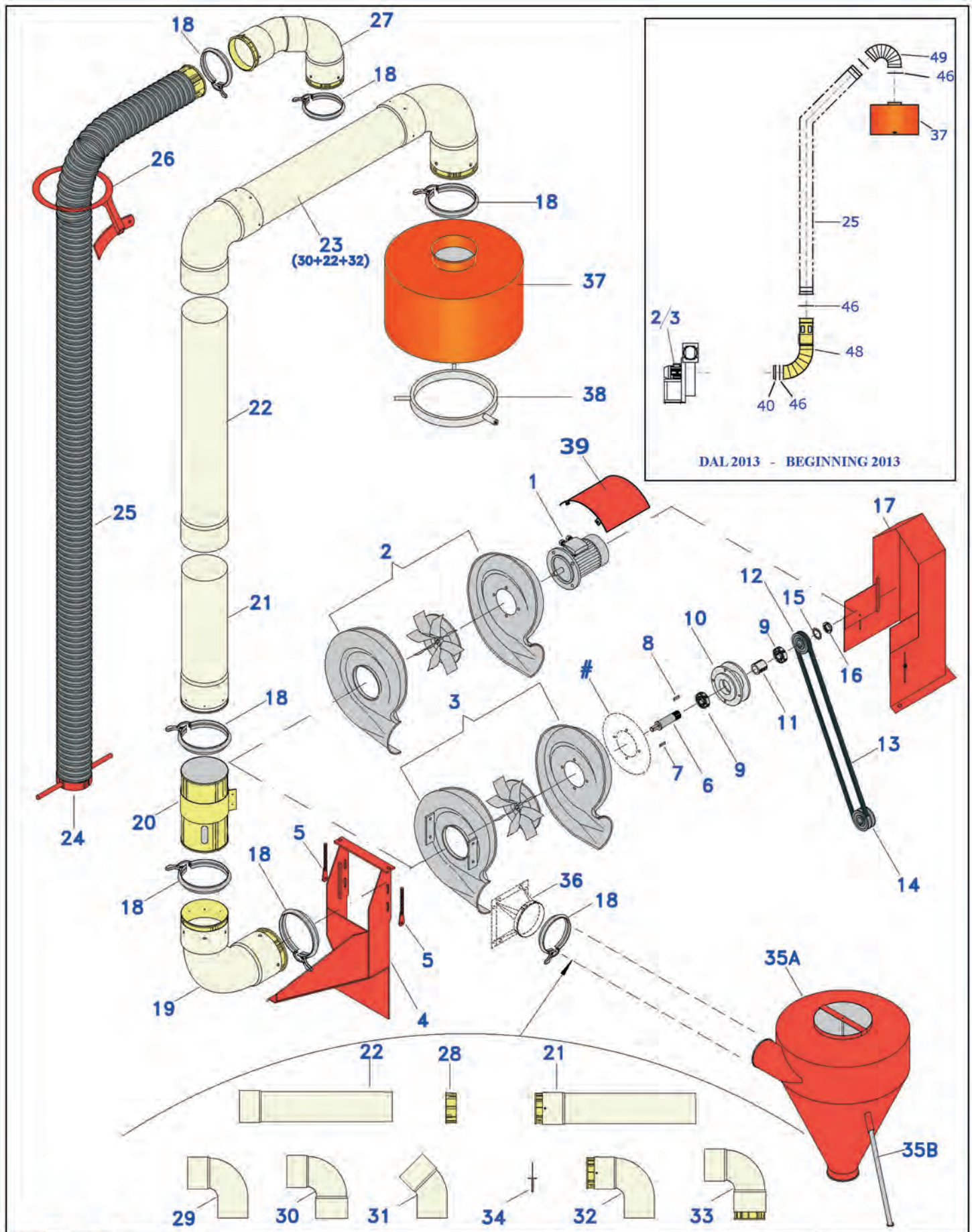


FP PEDROTTI ESSICCATOI

# DUST EXTRACTOR SYSTEM

TAB 14
2013

| | DUST EXTRACTOR SYSTEM | XL-XLM | TAB. 14 |
|---|---|---|---|
| | | Sheet 1 of 2 | 2013 |

| POS. | DESCRIPTION | UM | Euro € |
|---|---|---|---|
| 1A | ELECTRIC MOTOR 0,75 KW (HP 1 FOR FAN FRL 10 | N | 303,68 |
| 1B | ELECTRIC MOTOR 2,2 KW (HP 3) FOR FAN KB 401 RD | N | 372,30 |
| 1C | ELECTRIC MOTOR 2,2 KW (HP 3) FOR FAN KM | N | 372,30 |
| 2A | FAN FRL 10 | N | 614,48 |
| 2B | FAN KB 401 RD P4A (Pain) | N | 1.147,43 |
| 2C | FAN KM 311 RD R4A (Paint) | N | 892,88 |
| 3A | FAN FRL10 PER 12V ( HP1) (Paint) | N | 752,15 |
| 3B | FAN KB 401 RD PER 12V (Paint) | N | 1.225,12 |
| 4 | SUPPORTING STEEL FRAME FOR FAN UNTI | N | 458,54 |
| 5 | BELT TENSIONNER | N | 20,62 |
| 6A | DRIVE SHAFT FOR FAN FRL 10 | N | 91,69 |
| 6B | DRIVE SHAFT FOR FAN KB 401 RD | N | 91,69 |
| 7A | KEY 6X6X35 | N | 1,74 |
| 7B | KEY 8X7X35 | N | 1,74 |
| 8 | KEY 10X8X30 | N | 2,66 |
| 9A | BEARING 35X72X17 6207 2RS STND | N | 18,17 |
| 9B | BEARING 35X72X17 6207 2RS TOP QUALITY | N | 26,46 |
| 10 | ALLUMINIUM SUPPORT | N | 218,79 |
| 11 | SPACER Ø 35 L.= 30 | N | 14,88 |
| 12A | PULLEY B 90 1 RACE | N | 79,20 |
| 12B | PULLEY B 112 2 RACES | N | 51,34 |
| 13 | BELT BX 77 TOP QUALITY | N | 65,18 |
| 14 | PULLEY B 90 2 RACES | N | 90,07 |
| 15 | TOOTHED RING | N | 1,21 |
| 16 | LOCKING BOLT KM 7 | N | 5,18 |
| 17 | GUARD | N | 277,96 |
| 18A | FAST CLIP Ø 160 | N | 32,81 |
| 18B | FAST CLIP Ø 200 | N | 35,58 |
| 19A | CURVE 90° PVC Ø 160 F-F C/W 2 METAL TERMINALS | N | 136,59 |
| 19B | CURVE 90° PVC Ø 200 F-F C/W 2 METAL TERMINALS | N | 149,01 |
| 20A | ADJUSTING ASPIRATION VALVE Ø 160 | N | 107,83 |
| 20B | ADJUSTING ASPIRATION VALVE Ø 200 | N | 114,45 |
| 21A | PVC HOSE SECTION Ø 160 C/W 1 METAL TERMINAL | N | 85,05 |
| 21B | PVC HOSE SECTION Ø 200 C/W 1 METAL TERMINAL | N | 99,89 |
| 22A | PVC HOSE SECTION Ø 160 L=1m | N | 18,85 |
| 22B | PVC HOSE SECTION Ø 160 L=2m | N | 36,44 |
| 22C | PVC HOSE SECTION Ø 160 L=3m | N | 48,82 |
| 22D | PVC HOSE SECTION Ø 200 L=1m | N | 27,08 |
| 22E | PVC HOSE SECTION Ø 200 L=2m | N | 49,91 |
| 22F | PVC HOSE SECTION Ø 200 L=3m | N | 67,45 |
| 23A | PVC HOSE SECTION Ø 160 C/W 2 CURVES | N | 175,32 |
| 23B | PVC HOSE SECTION Ø 200 C/W 2 CURVES | N | 215,19 |
| 24 | TERMINAL BRACKET FOR FLEXIBLE HOSE Ø 160 | N | 46,90 |
| 25 | FLEXIBLE HOSE Ø 160 . | m | 46,94 |
| 25.1 | FLEXIBLE HOSE Ø 200 . | m | 67,89 |
| 25A | FLEXIBLE HOSE Ø 160 C/W 2 METAL TERMINAL | N | 326,02 |
| 26 | BLOCKING RING FOR FLEXIBLE HOSE | N | 122,88 |
| 27 | TWIN CURVE PVC Ø 160 | N | 148,72 |
| 28A | METAL TERMINAL END Ø 160 | N | 19,97 |
| 28B | METAL TERMINAL END Ø 200 | N | 21,33 |
| | | | |

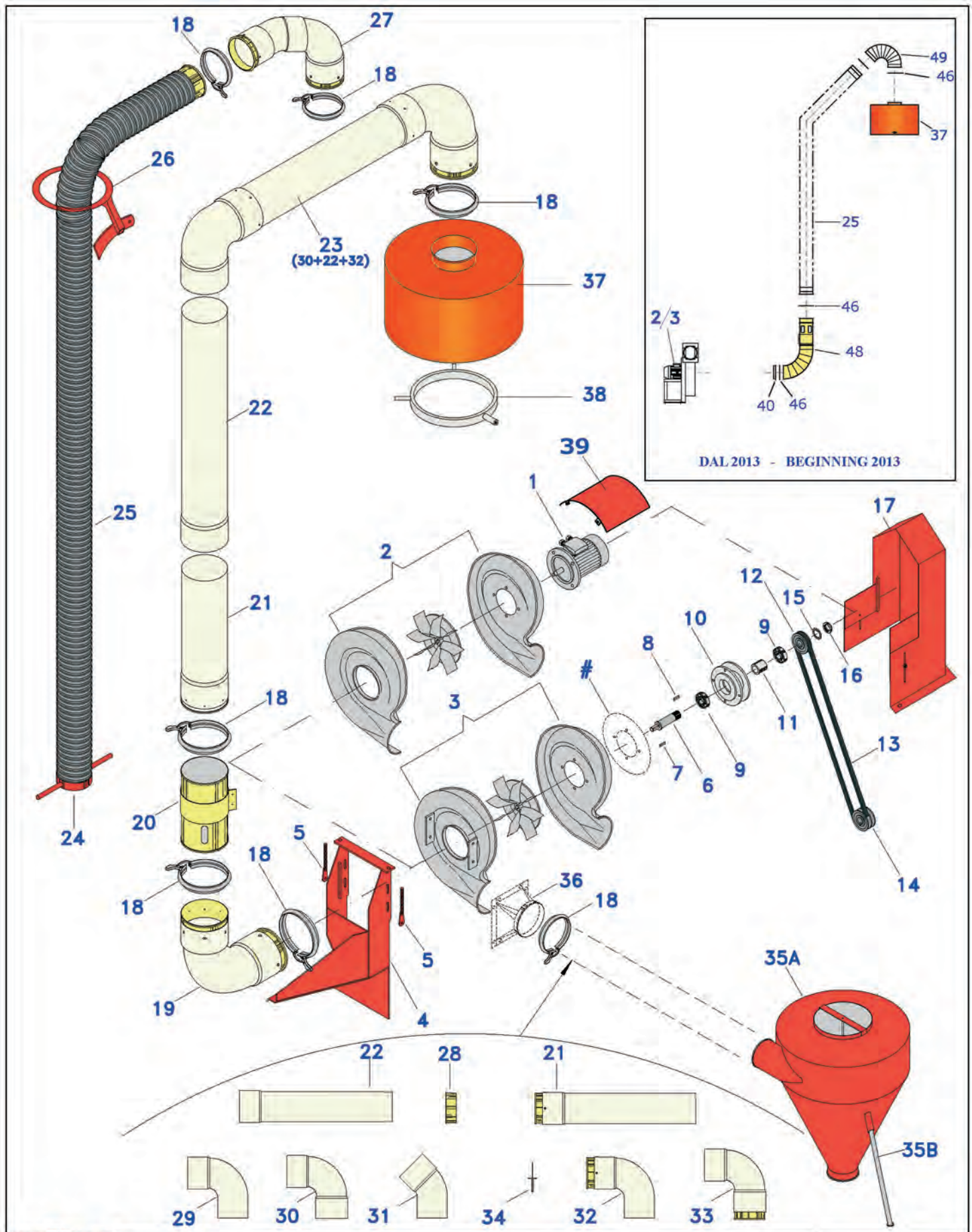


FP PEDROTTI ESSICCATOI

# DUST EXTRACTOR SYSTEM

TAB 14
2013

| POS. | DESCRIPTION | UM | Euro € |
|---|---|---|---|
| 29A | PVC CURVE 90° Ø 160 M-F | N | 20,58 |
| 29B | PVC CURVE 90° Ø 200 M-F | N | 35,92 |
| 30A | PVC CURVE 90° Ø 160 F-F | N | 30,64 |
| 30B | PVC CURVE 90° Ø 200 F-F | N | 40,33 |
| 31 | PVC CURVE 45° Ø 160 M-F | N | 11,47 |
| 32A | PVC CURVE 90° Ø 160 M-F C/W 1 METAL TERMINAL | N | 69,20 |
| 32B | PVC CURVE 90° Ø 200 M-F C/W 1 METAL TERMINAL | N | 85,90 |
| 33A | PVC CURVE 90° Ø 160 F-F C/W 1 METAL TERMINAL | N | 79,25 |
| 33B | PVC CURVE 90° Ø 200 F-F C/W 1 METAL TERMINAL | N | 90,31 |
| 34 | RIVET | N | 0,13 |
| 35A | DUST CYCLONE Ø 900 | N | 739,51 |
| 35B | SUPPORTING LEG | N | 169,88 |
| 35C | SUPPORT FOR CYCLONE Ø 900 | N | 214,41 |
| 36A | ADAPTOR FAN KB 401 | N | 93,87 |
| 36B | ADAPTOR FAN KM 311 | N | 199,36 |
| 37A | HEAD OF EXTRACTOR ø 560 ø580 | N | 365,85 |
| 37B | HEAD OF EXTRACTOR ø 650 | N | 386,12 |
| 38A | HEAD EXTRACTOR FIXING SUPPORT ø 360 | N | 178,23 |
| 38B | HEAD EXTRACTOR FIXING SUPPORT ø 450 | N | 183,65 |
| 39 | COVER OF MOTOR EXTRACTOR | N | 29,20 |
| # | SUPPORTING FRAME FOR FAN FRL 10 (Only 12V HP 1) | N | 37,23 |
| | | | |
| | | | |
| | | | |
| 40A | METAL TERMINAL END Ø 160 H35 | N | 9,95 |
| 40B | METAL TERMINAL END Ø 200 H35 | N | 10,69 |
| 46A | CLAMP Ø 160 | N | 3,69 |
| 46B | CLAMP Ø 200 | N | 4,06 |
| 48A | ADJUSTING ASPIRATION VALVE WITH CURVE Ø 160 ZINC-PLATED | N | 166,99 |
| 48B | ADJUSTING ASPIRATION VALVE WITH CURVE Ø 200 ZINC-PLATED | N | 177,68 |
| 49A | CURVE Ø 160 135° ZINC-PLATED | N | 87,88 |
| 49B | CURVE Ø 120 135° ZINC-PLATED | N | 109,65 |

UNTIL 2002

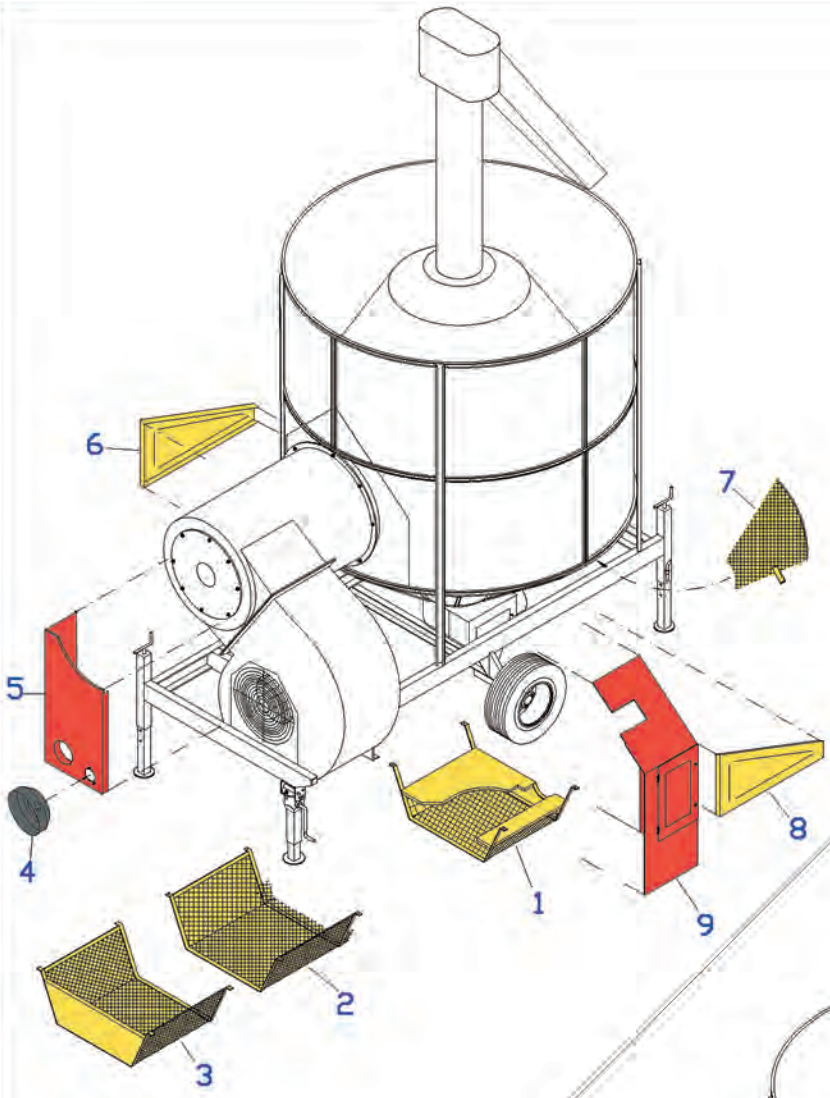


BEGINNING 2003

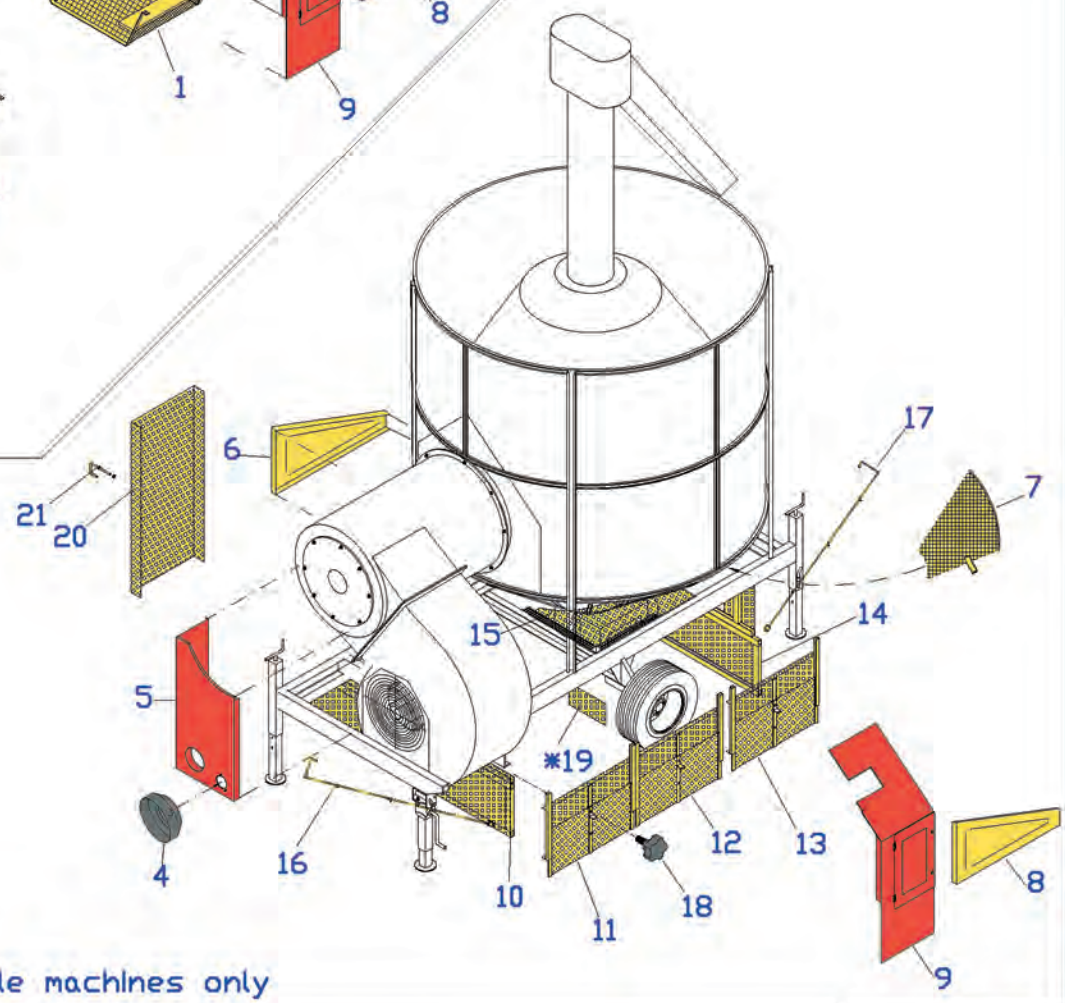


* Twin axle machines only

| | GUARDS | XL-XLM | TAB. 18 |
|---|---|---|---|
| | | Sheet 1 of 1 | 2013 |

| POS. | DESCRIZIONE | UM | Euro € |
|---|---|---|---|
| 4 | PTO SHAFT COVER (12V-Generator) | N | 27,38 |
| 5 | FRONT GUARD XLM | N | 355,48 |
| 6-8 | TRIANGULAR L/H SIDE GUARD (1 Pcs) | N | 269,11 |
| 7 | SCREEN GUARD ON INSPECTION DOOR | N | 78,40 |
| 9 | SIDE GUARD XLM (Generator) | N | 371,27 |
| 10 | FRONT BOTTOM GUARD | N | 185,25 |
| 11 | COMPLETE SIDE BOTTOM 1 | N | 123,05 |
| 11A | FIX SIDE BOTTOM GUARD 1 | N | 66,90 |
| 11B | MOBILE SIDE BOTTOM GUARD 1 | N | 50,99 |
| 12 | COMPLETE SIDE BOTTOM 2 | N | 123,05 |
| 12A | FIX SIDE BOTTOM GUARD 2 | N | 66,90 |
| 12B | MOBILE SIDE BOTTOM GUARD 2 | N | 50,99 |
| 13 | COMPLETE SIDE BOTTOM 3 | N | 123,05 |
| 13A | FIX SIDE BOTTOM GUARD 3 | N | 66,90 |
| 13B | MOBILE SIDE BOTTOM GUARD 3 | N | 50,99 |
| 14 | BACK BOTTOM GUARD | N | 179,61 |
| 15A | LEFT SCREEN FOR BOTTOM CASE | N | 31,73 |
| 15B | RIGHT SCREEN FOR BOTTOM CASE | N | 31,73 |
| 16 | FRONT LEVER | N | 25,43 |
| 17 | BACK LEVER | N | 25,43 |
| 18 | HANDLE M8 | N | 4,54 |
| 19 | TWIN AXLE GUARD | N | 13,56 |
| 20 | LADDER GARD | N | 46,77 |
| 21 | LADDER LOKING SCREW | N | 4,58 |

ESSICCATOI

# HYDRAULIC SYSTEM TO OPERATE CENTRE AUGER AND TOP SCREEN

TAB. 19A

2007

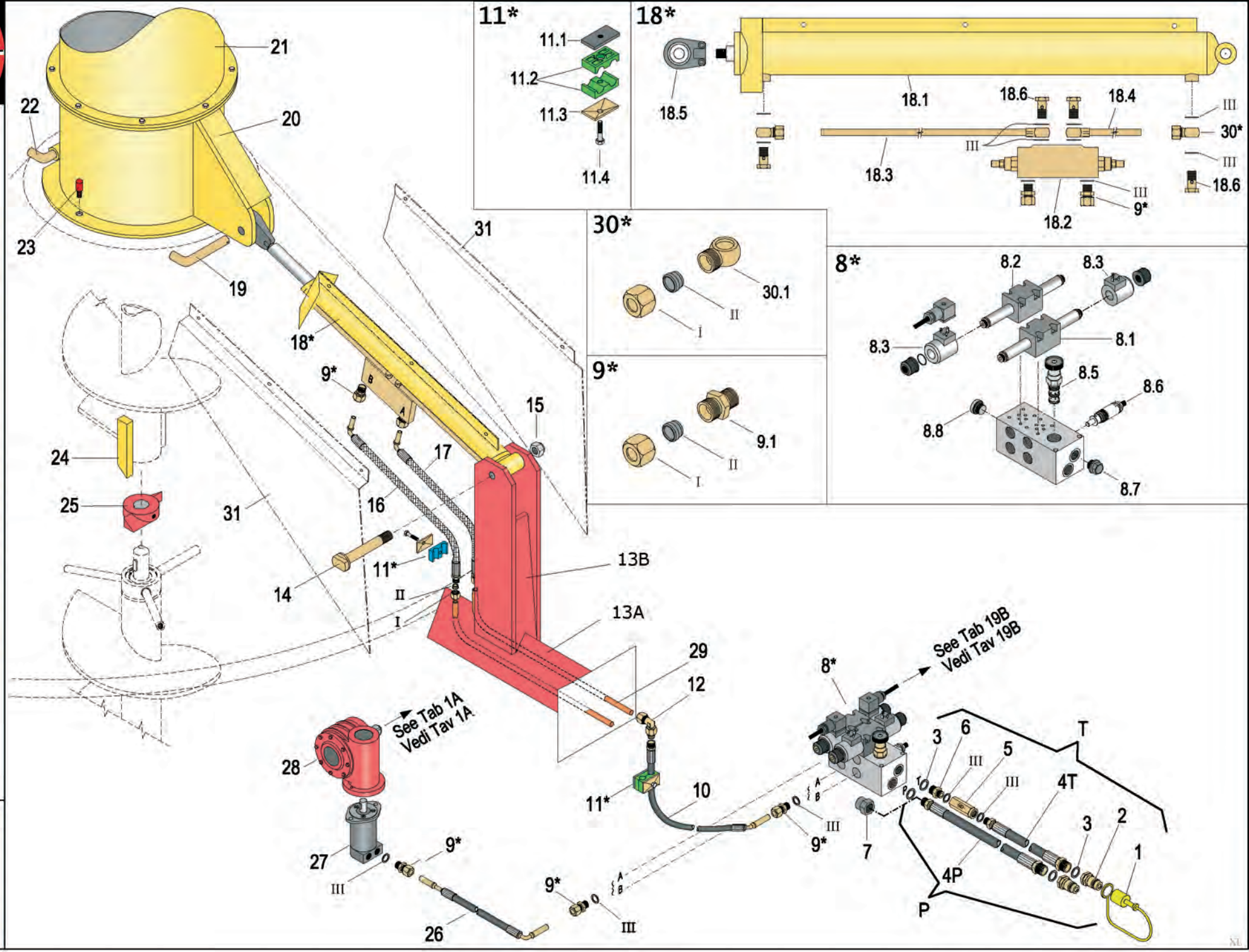

| | HYDRAULIC SYSTEM TO OPERATE CENTRE<br>AUGER AND TOP SCREEN mechanics parts | XL-XLM<br>Sheet 1 of 2 | TAB. 19A<br>2013 |
|---|---|---|---|

| POS. | DESCRIPTION | UM | Euro € |
|---|---|---|---|
| 1A | RED PROTECTION FAST CONNECTOR | N | 2,14 |
| 1B | YELLOW PROTECTION FAST CONNECTOR | N | 2,14 |
| 2 | FAST CONNECTOR | N | 19,65 |
| 3 | GASKET 1/2 " WITH "OR" | N | 0,62 |
| 4T | PIPE 3/8" - 1/2" HIGH PRESSURE - RETURN | N | 77,82 |
| 4P | PIPE 1/2" - 1/2" HIGH PRESSURE - DELIVERY | N | 77,82 |
| T | COMPLETE PIPE HIGH PRESSURE WITH VALVE - RETURN | N | 158,36 |
| P | COMPLETE PIPE HIGH PRESSURE - DELIVERY | N | 119,11 |
| 5 | CHECK VALVE | N | 33,99 |
| 6 | CONNECTOR 3/8" - 1/2" | N | 3,72 |
| 7 | PLASTIC PLUG 1/2" F | N | 4,47 |
| 8 | DISTRIBUTION UNIT DOUBLE EFFECT COMPLETE | N | 1.435,55 |
| 8.1 | SOLENOID VALVE FOR RAM OF CENTRAL AUGER - AD3E04C | N | 297,67 |
| 8.2 | SOLENOID VALVE FOR ENGINE OF TOP SCREEN - AD3E02C | N | 297,67 |
| 8.3 | COIL OF SOLENOID VALVE | N | 54,86 |
| 8.5 | FLOW CONTROL VALVE | N | 507,79 |
| 8.6 | HIGH-PRESSURE VALVE | N | 74,32 |
| 8.7 | PLASTIC PLUG Ø 1/2" | N | 3,72 |
| 8.8 | MALE PLUG 1/2" WITH GASKET | N | 3,40 |
| 9 | CONNECTOR Ø 3/8" GAS CIL. FOR PIPE Ø 12 COMPLETE | N | 4,88 |
| 9.1 | CONNECTOR Ø 3/8" GAS CIL. FOR PIPE Ø 12 | N | 3,44 |
| 10 | PIPE 1/4" R2T L=4100 | N | 72,80 |
| 11 | DOUBLE COLLAR Ø 3/8" COMPLETE | N | 7,56 |
| 11.1 | LOWER PLATE TO BE WELDED | N | 3,07 |
| 11.2 | HALF-COLLAR COUPLE | N | 3,24 |
| 11.3 | TOP PLATE | N | 1,15 |
| 11.4 | SCREW M 6X30 | N | 0,10 |
| 12 | STRAIGHT THROUGH-SIDEWALL FOR PIPES Ø 12 COMPLETE | N | 8,28 |
| 12.1 | STRAIGHT THROUGH-SIDEWALL FOR PIPES Ø 12 | N | 3,13 |
| 13A | BASE FRAMEWORK FOR FIXING HYDRAULIC RAM | N | 50,82 |
| 13B | COUPLE OF VERTICAL PLATES FOR FIXING HYDRAULIC RAM | N | 56,92 |
| 14 | BASE PIN FOR HYDRAULIC RAM | N | 66,85 |
| 15 | SELF-LOCKING NUT M20 | N | 0,90 |
| 16 | ARMORED PIPE 3/8" R1T L=420 | N | 61,69 |
| 17 | ARMORED PIPE 3/8" R1T L=310 | N | 61,46 |
| 18 | HYDRAULIC RAM COMPLETE FOR XLM | N | 993,34 |
| 18.1 | HYDRAULIC RAM FOR XLM | N | 718,22 |
| 18.2 | STOP AND CONTROLL VALVE OF DOWN STROKE | N | 202,11 |
| 18.3 | LONG PIPE WITH CONNECTOR | N | |
| 18.4 | SHORT PIPE WITH CONNECTOR | N | |
| 18.5 | WORKHEAD OF TOP FIXING | N | |
| 18,6 | DRILLED SCREW | N | |
| 19 | TOP ANCHORAGE PIN OF HYDRAULIC RAM | N | 34,24 |
| 20 | BASE STUB PIPE OF EXTENSION PIPE L=300 | N | 345,70 |
| 21 | BUBBLE EXTENSION PIPE FOR ROTATING TOP HAT L=2850 | N | 1.158,55 |
| 22 | BASE ANCHORAGE PIN FOR EXTENSION PIPE | N | 34,24 |
| 23 | DOWEL PIN | N | 12,80 |
| 24 | DRIWING PLATE PIN | N | 10,90 |
| 25 | DOUBLE BIG DRIVING JACK FOR HYDRAULIC SYSTEM | N | 74,20 |
| 26 | PIPE HIGH PRESSURE 1/4" R1T L=5500 | N | 94,44 |
| 27 | HYDRAULIC ENGINE 50 CC | N | 549,66 |

ESSICCATOI

# HYDRAULIC SYSTEM TO OPERATE CENTRE AUGER AND TOP SCREEN

TAB. 19A

2007

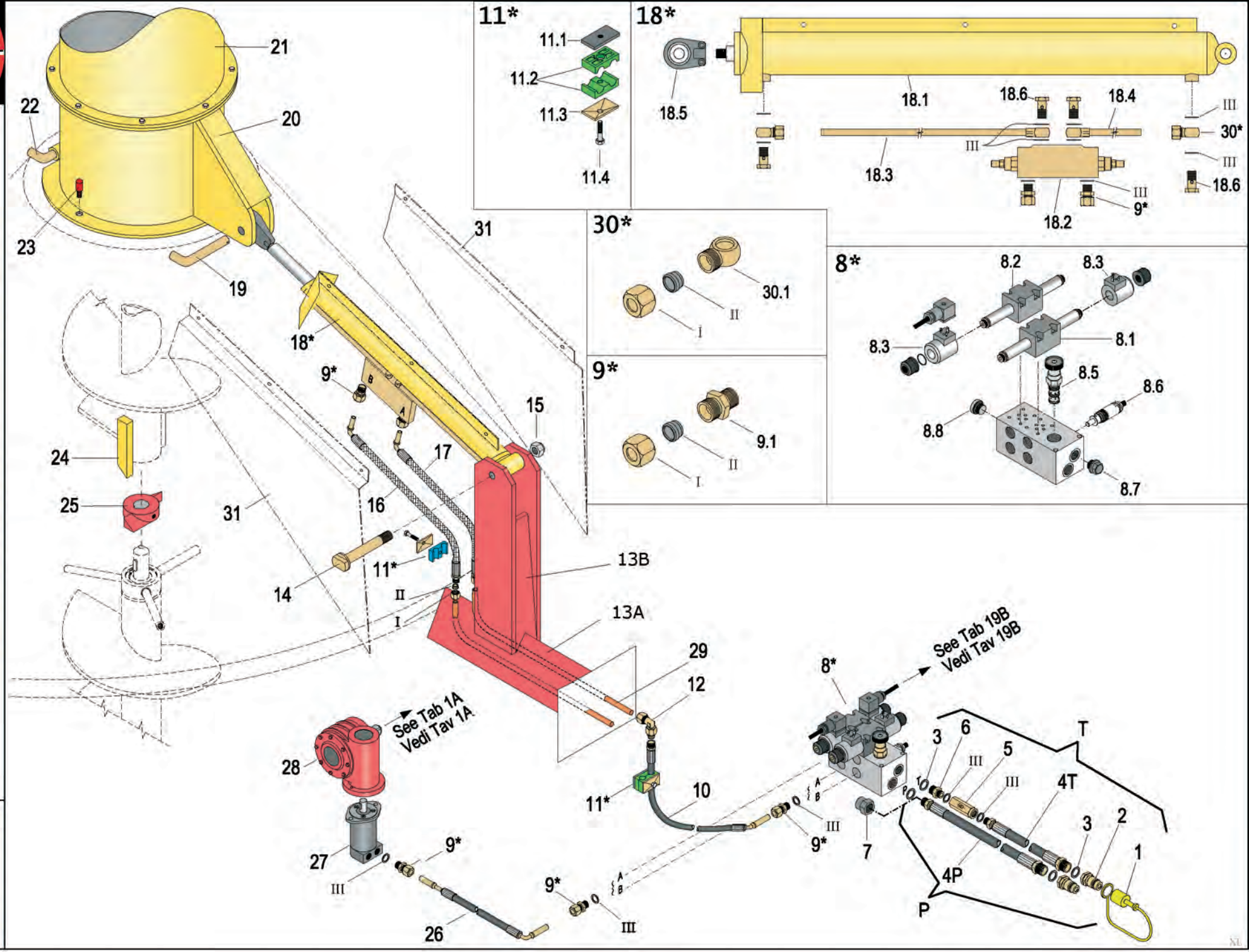

| POS. | DESCRIPTION | UM | Euro € |
|---|---|---|---|
| 28 | REDUCTION GEAR 1:40 | N | 374,86 |
| | | | |
| | | | |
| 30 | COMPLETE METAL EYELET CONNECTOR | N | |
| 30.1 | METAL EYELET | N | |
| 31 | COUPLE OF PROTECTION GUARD FOR HYDRAULIC RAM-PIPE FITTINGS X | N | 122,64 |
| | | | |
| | | | |
| | | | |
| I | NUT DIN 12 L | N | 0,78 |
| II | NOSE DIN 12 L | N | 0,66 |
| III | WASHER 3/8" WITH "OR" | N | 0,51 |

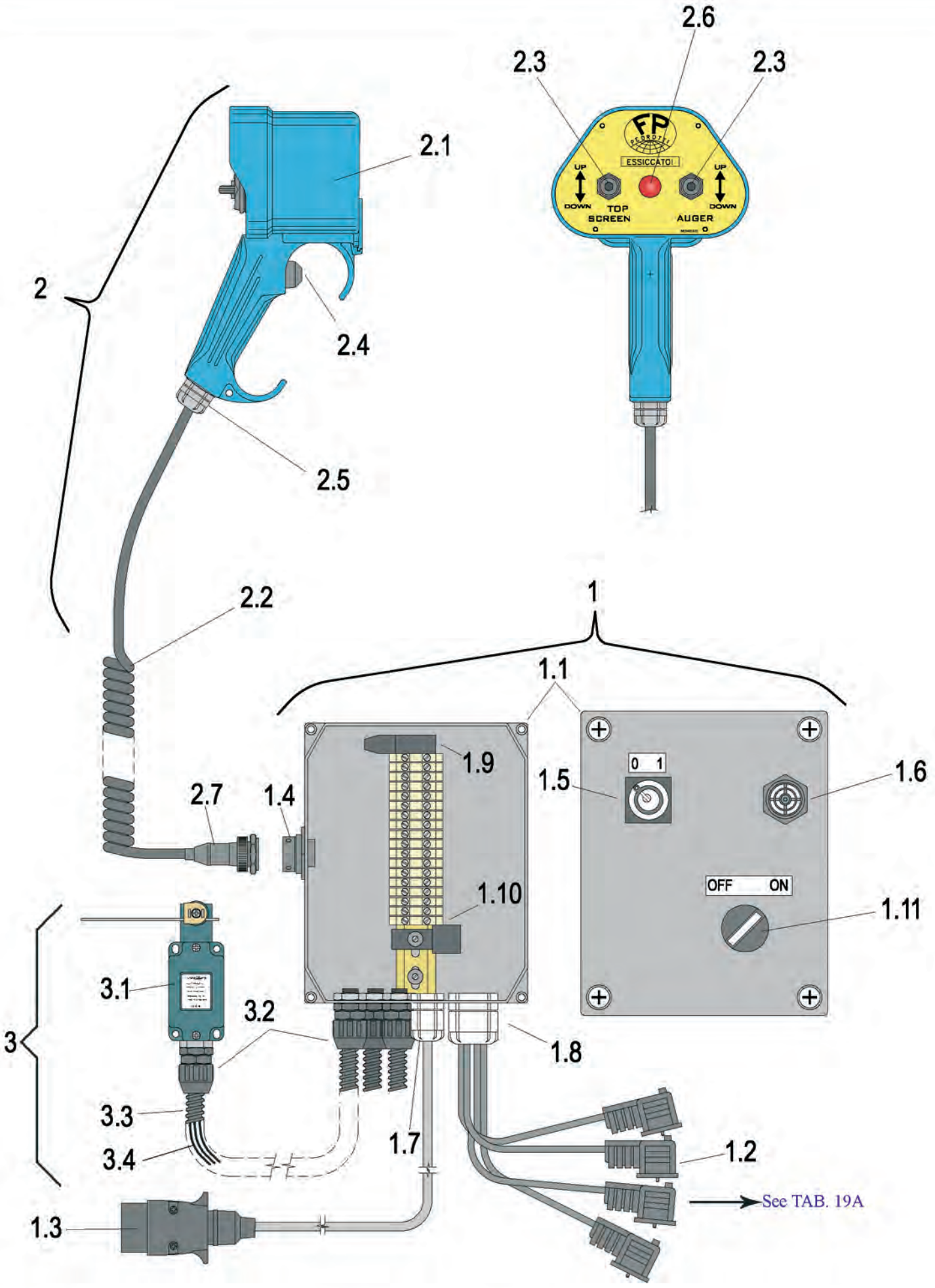
2.6
2.3
2.3
2.1
2
2.4
2.5
UP
DOWN
TOP SCREEN
AUGER
UP
DOWN
ESSICCATOI
2.2
1
1.1
1.9
1.5
1.6
2.7
1.4
0 1
1.10
OFF ON
1.11
3.1
3.2
3
1.8
3.3
1.7
1.2
3.4
1.3
See TAB. 19A

| | HYDRAULIC SYSTEM TO OPERATE CENTRE<br>AUGER AND TOP SCREEN electrics parts | XL-XLM<br>Sheet 1 of 1 | TAB. 19B<br>2013 |
|---|---|---|---|

| POS. | DESCRIPTION | UM | Euro € |
|---|---|---|---|
| | | | |
| 1 | STOP RUN CONTROL PANEL COMPLETE | N | 942,28 |
| 1.1 | ALUMINIUM BOX | N | 46,95 |
| 1.2 | CONNECTOR FOR SOLENOID VALVES | N | 15,88 |
| 1.3 | ELECTRICAL PLUG 7 POLES TO BE CONNECTED TO THE TRACTOR | N | 5,25 |
| 1.4 | SIDE SOCKET 14 POLES F FROM THE CONTROL PANEL WITH COVER | N | 37,91 |
| 1.5 | SELECTOR SWITCH ON-OFF WITH STARTING KEY | N | 54,47 |
| 1.6 | ACOUSTIC BUZZER | N | 18,79 |
| 1.7 | CABLE PRESS PG 11 | N | 1,05 |
| 1.8 | CABLE PRESS PG 21 | N | 1,69 |
| 1.9 | FUSE 7,5 A | N | 2,09 |
| 1.10 | RELAY 12 V 40/15A | N | 10,86 |
| 1.11 | SELECTOR 2 POSITIONS | N | |
| | | | |
| 2 | REMOTE CONTROL UNIT COMPLETE | N | 740,65 |
| 2.1 | CASING OF REMOTE CONTROL UNIT | N | 144,72 |
| 2.2 | SPIRAL CABLE FOR REMOTE CONTROL UNIT | N | 76,66 |
| 2.3 | SWITCH WITH 3 POSITIONS | N | 21,41 |
| 2.4 | BLACK PUSH BUTTO UNDER HANDGRIP OF REMOTE CONTROL UNIT | N | 24,09 |
| 2.5 | CABLE GIUDE PG 13 | N | 1,31 |
| 2.6 | RED LIGHT OF REMOTE CONTROL UNIT | N | 7,92 |
| 2.7 | CONNECTOR 14 POLES M MOVABLE | N | 19,90 |
| | | | |
| 3 | STOP RUN COMPLETE WITH CABLES AND SHEATH | N | 136,54 |
| 3.1 | STOP RUN FD 532 | N | 50,53 |
| 3.2 | CONNECTOR GLMN 10 PG 7 | N | 1,78 |
| 3.3 | SHEATH GL 10 | m | 1,95 |
| 3.4 | CABLES 1,5 mm² | m | 0,44 |