DRIERS
JUNIOR-SUPER

SPARE PARTS BOOK
PRICE LIST 2013

FP PEDROTTI
ESSICCATOI

FRATELLI PEDROTTI s.r.l.
via Zanardelli 12/A 25030
MAIRANO BRESCIA - ITALY

Tel. 030 99 75 210 - 030 99 75 119
Fax. 030 99 75 220
e-Mail: info@pedrottisrl.it
internet: www.pedrottisrl.it

INDEX OF TABLE
JUNIOR - SUPER

YEAR 2013

TAB.00	QUICK CHECK MOST COMMON SPARE
TAB. 1	FRAME PARTS
TAB. 1A	WINCHES FOR RETRACTABLE SCREEN
TAB. 1B	WINCHES FOR SPIRALS
TAB. 2	TRANSMISSION TO CENTRE AUGER, TO THE FAN AND TO THE GENERATOR
TAB. 3	FILLING AUGER
TAB. 4	CENTRE AUGER - INTERNAL GEAR TRASMISSION BY CHAINS
TAV. 4A	COCLEA CENTRALE
TAB 4B	AGITATORS - INTERNAL GEAR -TRANSMISSION BOTTOM BY PINION
TAB. 4C	AGITATORS - INTERNAL GEAR - TRANSMISSION BOTTOM BY CHAIN
TAB. 5	SPIRAL PIPE - (AGITATORS - For machines with inside chain only)
TAB. 6	COMBUSTION CHAMBER - FAN UNIT
TAB.7	ELECTRIC TRANSMISSION
TAB. 8	GEARBOX
TAB.8A	LUBRICATION SYSTEM
TAB.8B	AUTOMATIC AND PERMANENT LUBRICATION SYSTEM
TAB.9	ELECTRIC PANEL 12V - THERMOSTATS - ELECTRICAL ITEMS - REVS SENSORS
TAB.9A	GENERATORS ELECTRIC PANEL - THERMOSTATS - ELECTRICAL ITEM
TAB.9B	ELECTRIC PANEL (DRYERS MOD. ELECTRIC)
TAB. 9C	PLC ELECTRIC PANEL (DRYERS MOD. ELECTRICS)
TAB. 9D	PLC ELECTRIC PANEL (DRYERS MOD. GENERATORS)
TAB. 9E	ELECTRIC PANEL (DRYERS MOD. 12V)
TAB. 10	BURNER 12V FUEL PUMP - ALTERNATOR - BURNER FAN DRIVING
TAB.10A	"PEDROTTI" BURNER" 380 VOLTS
TAB. 10B	GPL BURNER
TAB. 11	FUEL PLANT SYSTEM
TAB.12	GENERATOR
TAB. 13	DESACHARGING CHUTE
TAB. 14	DUST EXTRACTOR SYSTEM
TAB.15	OLD SUPER/JUNIOR CUENOD BURNER PCS 45
TAB. 16	OLD SUPER DRIVING OF CENTRE AUGER, FAN AND GENERATOR
TAB. 17	OLD JUNIOR DRIVING OF CENTRE AUGER, FAN AND GENERATOR

POS.	DESCRIPTION	UM	Euro €
	-CENTRE AUGERS-		
A	SPIRAL Ø 280x280x70	m	83,95
B	SPIRAL Ø 330x350x90	m	122,28
	A - BOTTOM AUGER TAV. - 4A Pos.15 (1)		
1	JUNIOR 60-90-100-120 Length 3230	N	1.179,78
2	SUPER 60-90-100-120 Length 3240	N	1.491,82
2A	SUPER 60-90-100-120 Tutto rip. Length 3240	N	2.038,59
2B	SUPER 60-90-100-120 Creusabro Length. 3240	N	3.808,28
3	SUPER 120 H PLENUM Lenght. 3890	N	1.594,91
4	SUPER 145 Length 3690	N	1.563,19
5	SUPER 150 Length 3500		1.525,72
	B - TOP AUGER STAND. DESIGN TAV.4A Pos.24 (1)	N	
6	JUNIOR 60 Length 2110	N	905,48
7	JUNIOR 90 Length. 2110	N	905,48
8	JUNIOR 100 Length. 2510	N	952,74
9	JUNIOR 120 Length. 3010	N	1.053,80
10	SUPER 60 Length. 2110	N	1.104,74
11	SUPER 90 Length. 2110	N	1.104,74
12	SUPER 100 Length. 2510	N	1.241,54
13	SUPER 120 Length. 3010	N	1.259,70
14	SUPER 120 H PLENUM Length. 2510	N	1.241,54
15	SUPER 145 Length. 3610	N	1.367,09
16	SUPER 150 Length. 2760		1.250,62
	C - TOP AUGER BUBBLE DESIGN (DUST-EXTRACTOR) TAB.4A Pos.34 (1)		
17	JUNIOR 60 Length 2450	N	1.050,85
18	JUNIOR 90 Length. 2450	N	1.050,85
19	JUNIOR 100 Length. 2450	N	1.050,85
20	JUNIOR 120 Length. 2950	N	1.067,95
21	SUPER 60 Length. 2450	N	1.267,90
22	SUPER 90 Length. 2450	N	1.267,90
23	SUPER 100 Length. 2450	N	1.267,90
24	SUPER 120 Length. 2950	N	1.316,63
24A	SUPER 120 Creusabro Length. 2950	N	3.926,76
25	SUPER 120 H PLENUM Length. 2450	N	1.267,90
26	SUPER 145 Length. 3550	N	1.411,79
27	SUPER 150 Length. 2700	N	1.276,98
(1)	*Over price of augers modified for transport*	N	311,09
	-TUBES FOR CENTRE AUGER-		
	A - BOTTOM TUBES TAV.5 Pos24. (2)	N	
28	JUNIOR 60-90-100-120 Length 2600 ZINC-PLATED	N	1.089,20
29	SUPER 60-90-100-120 Length. 2600 ZINC-PLATED	N	1.231,98
30	SUPER 120 H PLENUM Length. 3300 ZINC-PLATED	N	1.520,55
31	SUPER 145 Length. 3100 ZINC-PLATED	N	1.402,29
32	SUPER 150 Length. 2860 ZINC-PLATED	N	1.317,39

POS	DESCRIPTION	UM	Euro €
	B - TOP TUBES STANDARD DESIGN (2)		
	TAV.13 Pos. 5B		
33	JUNIOR 60 - JUNIOR 90 Length 2000 paint	N	697,93
33A	JUNIOR 90 - JUNIOR 90 Length. 2000 ZINC-PLATED	N	871,58
34	JUNIOR 100 Length. 2400 paint	N	787,53
34A	JUNIOR 100 Length. 2400 ZINC-PLATED	N	991,71
35	JUNIOR 120 Length. 2900 paint	N	896,51
35A	JUNIOR 120 Length. 2900 ZINC-PLATED	N	1.140,92
36	SUPER 60 - SUPER 90 Length. 2000 paint	N	776,51
36A	SUPER 60 - SUPER 90 Length. 2000 ZINC-PLATED	N	978,53
37	SUPER 100 - S120 H PLENUM Length. 2400 paint	N	884,11
37A	SUPER 100 - S120 H PLENUM Length. 2400 ZINC-PLATED	N	1.120,04
38	SUPER 120 Length. 2900 paint	N	1.010,91
38A	SUPER 120 Length. 2900 ZINC-PLATED	N	1.294,11
39	SUPER 150 Length. 2650 paint	N	943,27
39A	SUPER 150 Length. 2650 ZINC-PLATED	N	1.207,07
40	SUPER 145 Length. 3500 paint	N	1.157,68
40A	SUPER 145 Length. 3500 ZINC-PLATED	N	1.504,49
	C - TOP TUBES BUBBLE DESIGN (DUST EXTRACTOR) (2)		
	C/W ROTATING UNLOADING CHUTE TAV.13 Pos.5A		
41	JUNIOR 60 - J90 - J100 Length 2400 paint	N	1.013,83
41A	JUNIOR 60 - J90 - J100 Length 2400 ZINC-PLATED	N	1.163,26
42	JUNIOR 120 Length 2900 paint	N	1.125,85
42A	JUNIOR 120 Length 2900 ZINC-PLATED	N	1.312,47
43	SUPER 60-S90-S100-S120 H.PL. Length 2400 paint	N	1.017,34
43A	SUPER 60-S90-S100-S120 H.PL. Length 2400 ZINC-PLATED	N	1.255,09
44	SUPER 120 Length 2900 paint	N	1.162,37
44A	SUPER 120 Length 2900 ZINC-PLATED	N	1.432,92
45	SUPER 150 Length 2650 paint	N	1.081,11
45A	SUPER 150 Length 2650 ZINC-PLATED	N	1.342,12
46	SUPER 145 Length 3500 paint	N	1.332,88
46A	SUPER 145 Length 3500 ZINC-PLATED	N	1.639,54
(2)	*Over price of tubes modified for transport*	N	148,26
	D - TOP TUBES BUBBLE DESIGN (DUST EXTRACTOR) (3)		
	C/W FIX UNLOADING CHUTE TAV.13 Pos. 5C		
55	TOP TUBE FIX CHUTE L=1200-1800 mm paint	N	779,99
56	TOP TUBE FIX CHUTE L=1800-2300 mm paint	N	893,55
57	TOP TUBE FIX CHUTE L=2300-2600 mm paint	N	980,35
58	TOP TUBE FIX CHUTE L=2600-2900 mm paint	N	1.044,67
59	TOP TUBE FIX CHUTE L=2900-3700 mm paint	N	1.232,40
60	TOP TUBE FIX CHUTE L=3700-4100 mm paint	N	1.320,31
(3)	*Overprice of galvanized top tubes with fix unloading chute (price fo 1 mt.)*	m	109,72

POS	DESCRIPTION		
	-BASIC BEARINGS COMPLET AND ASSEMBLED-		
	A - BOTTOM BEARING TAV.4A Pos.8-9-10-11		
61	JUNIOR STND	N	347,63
61A	JUNIOR TOP QUALITY	N	625,89
62	SUPER STND	N	432,04
62A	SUPER TOP QUALITY	N	764,13
	B - INTERMEDIATE CROSS BEARING TAV. 4A Pos.18-19-20-21-22		
63	JUNIOR STND	N	202,90
63A	JUNIOR TOP QUALITY	N	206,07
64	SUPER STND	N	219,77
64A	SUPER TOP QUALITY	N	221,67
	C - TOP BEARING STANDARD AUGER TAV.4A Pos.26-27-28-29		
65	JUNIOR (Hold Type UCF 208 STND)	N	36,68
65A	JUNIOR (Hold Type UCF 208 TOP QUALITY)	N	87,23
66	JUNIOR - SUPER STND	N	233,41
66A	JUNIOR - SUPER TOP QUALITY	N	375,00
	D - TOP BEARING FOR BUBBLE AUGERS (DUST EXTRACT)TAV.4A Pos.36-37-38-39-22		
67	JUNIOR - SUPER STND	N	273,91
67A	JUNIOR - SUPER TOP QUALITY	N	394,58
	-SHAFTS-		
	A - AGITATORS DRIVING SHAFT . 4B- (4C) Pos.4 -(5)		
68	JUNIOR WITH CHAIN ø 30 Length 1110	N	125,49
69	JUNIOR WITH GEAR ø 30 Length 1230	N	128,22
70	SUPER WITH CHAIN ø 30 Length 1125	N	125,49
71	SUPER WITH GEAR ø 30 Length 1250	N	128,22
71	SUPER 150 WITH CHAIN ø 30 Length 1220	N	138,85
73	SUPER 150 WITH SMALL GEAR ø 30 Length 1320	N	128,22
74	SUPER 150 WITH BIG GEAR (1998) ø 35 Length 1250	N	150,60
	B - FAN SHAFT TAB. 2 POS. 43		
75	JUNIOR	N	477,18
76	SUPER	N	477,18
77	SUPER 150	N	477,18
	-PAINTS-		
80	RED PAINT "Pedrotti"	Kg	29,93
81	YELLOW PAINT "Pedrotti"	Kg	21,84
82	CATALYZER	Kg	47,45
83	ANTI-RUST PAINT	Kg	9,61

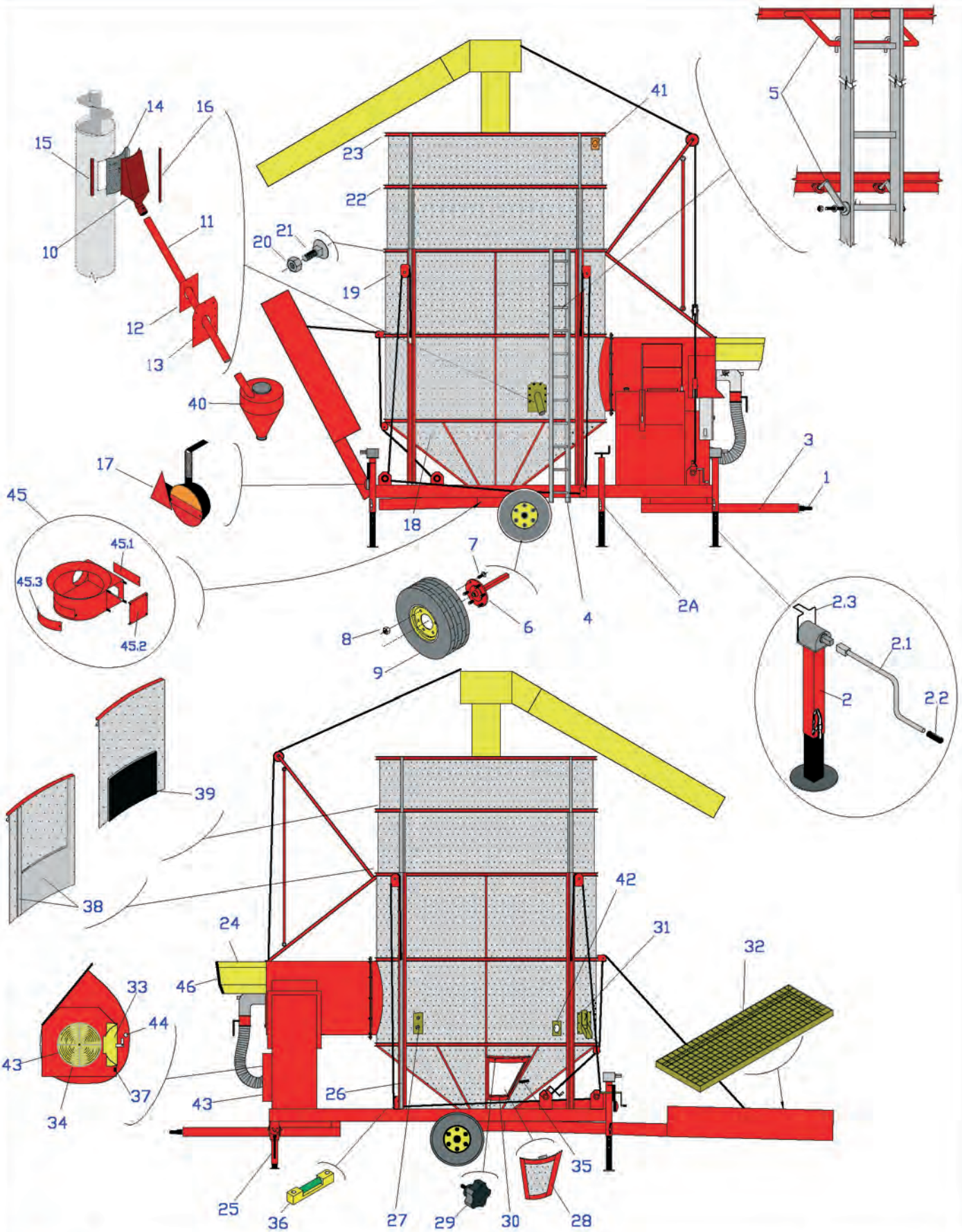

FP PEDROTTI ESSICCATOI

FRAME PARTS

TAB. 1
2004

	FRAME PARTS	JUNIOR-SUPER	TAB.1
		Sheet 1 of 2	2013

POS	DESCRIPTION	UM	Euro €
1	DRAWBAR EYE	N	74,53
2	STANDING ADJUSTABLE JACK FRONT LEVER	N	274,85
2.1	LEVER	N	26,46
2.2	PLASTIC HANDLE	N	7,34
2.3	SAFETY CLIP	N	14,09
2A	STANDING ADJUSTABLE JACK	N	173,38
3	DRAWBAR	N	621,38
4	ALLUMINIUM LADDER	N	229,95
5	ITEM FIXING OF ALLUMINIUM LADDER	N	88,07
6	SEMI AXLE	N	153,67
7	THREADED SCREW M 18X1.5	N	3,94
8	WHEEL NUT M 18X1.5	N	1,39
9	WHEEL	N	419,75
10	TOP BOX FOR GRAVITY CLEANER	N	208,86
11	GRAVITY CLEANER PIPE	N	44,04
12	INNER FIXING PLATE	N	12,80
13	OUTER FIXING PLATE	N	20,62
14A	BLIND SCREEN FOR CLEANER	N	34,27
14B	SCREEN FOR CLEANER HOLE Ø 3	N	39,44
14C	SCREEN FOR CLEANER HOLE Ø 4	N	39,30
14D	SCREEN FOR CLEANER HOLE Ø 5	N	38,87
15	BRACKET	N	29,79
16	BRACKET	N	35,44
17	BACK ROAD LIGHTS KIT	N	184,87
18A	BLIND BOTTOM SECTION	N	49,62
18B	TRIANGULAR BOTTOM SCREEN ø 1,5 mm	N	78,21
18C	TRIANGULAR BOTTOM SCREEN ø 2,5 mm	N	68,98
19A	PERFORATED SCREEN INOX AISI 430 Ø 1,5	m²	66,17
19B	PERFORATED SCREEN INOX AISI 430 Ø 2,5	m²	58,03
20	INOX STEEL NUT M8	N	0,26
21	INOX STEEL SCREW M8X20 FOR SCREEN FIXING	N	0,47
22	RING "U" SHAPE FOR 1ST RETRACTABLE SCREEN	N	256,55
23	RING "U" SHAPE FOR 2ND RETRACTABLE SCREEN	N	249,23
24	BURNER COVER	N	183,75
25	FRONT TILTING SUPPORTING JACK	N	251,12
26	CHANNEL "C" SHAPE FOR SLIDING RODS	N	108,88
27	FIXING BRACKET FOR PROBES GAUGES	N	90,72
28A	COMPLET INSPECTION DOOR SOLID SCREEN	N	169,71
28B	COMPLET INSPECTION DOOR SCREEN ø 1,5 mm	N	195,00
28C	COMPLET INSPECTION DOOR SCREEN ø 2,5 mm	N	186,23
29	HANDLE M10	N	5,23
30	SAMPLE OUTLET	N	171,26
31	SAMPLE OUTLET	N	67,67
32	TOP PROTECTION SCREEN ON INTAKE HOPPER	N	230,18
33	FAN COVER BEGINING 1998	N	244,32
33A	FAN BLIND COVER UNTIL 1997	N	270,98
34	FAN PROTECTION GRID	N	178,12
35	DOOR SAFETY SWITCH	N	64,09
36	LEVEL BUBBLE	N	5,36
37	FAN COVER SAFETY SWITCH	N	41,74
38	SLIDING CLOSING ON 1.ST RETRACTABLE SCREEN	N	116,32

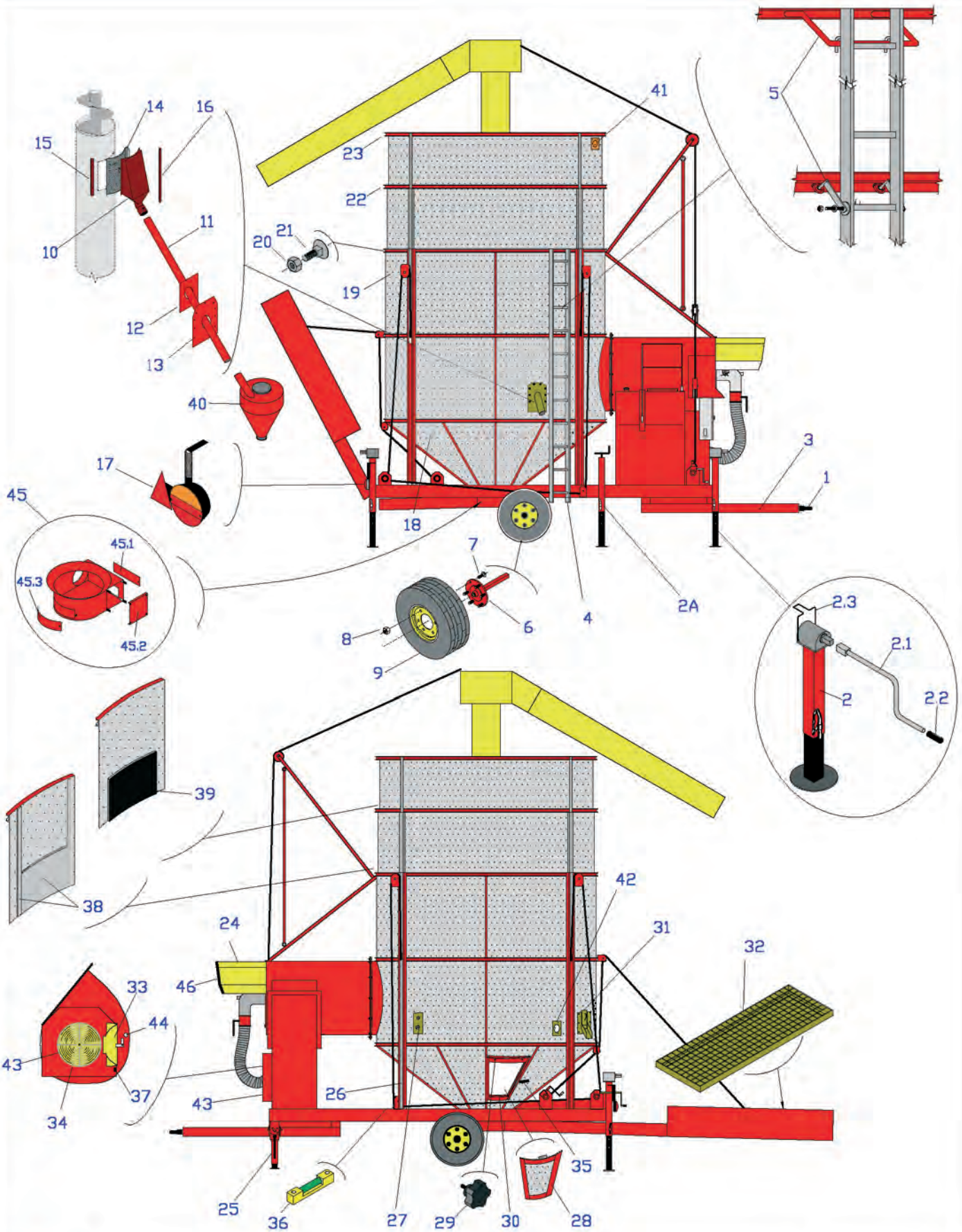

FP PEDROTTI ESSICCATOI

FRAME PARTS

TAB. 1
2004

	FRAME PARTS	JUNIOR-SUPER	TAB.1
		Sheet 2 of 2	2013

POS	DESCRIPTION	UM	Euro €
39	CLOSING RUBBER ON 2.ND RETRACTABLE SCREEN	N	67,98
40	DUST CYCLONE Ø 300	N	276,77
41A	PAD SWITCH (DIAPHRAM TYPE)	N	251,12
41A.1	DIAPHRAM FOR PAD SWITCH	N	87,78
41B	PAD SWITCH (PROPELLER TYPE)	N	501,88
42	CONVEYNG PIPE FOR GREASING	N	56,23
43	CALENDED RING ON AIR CONVEYOR	N	77,84
44	WHITE OR ORANGE REFLECTOR	N	5,15
44A	REVERSE LIGHT	N	39,19
45	INOX BOTTOM CASE	N	690,31
45.1	INOX COVER PLATE	N	38,52
45.2	INOX BEARING COVER	N	38,52
45.3	INOX CURVED COVER	N	38,52
46	PROTECTING SHEATH FOR BURNER COVER	m	9,67

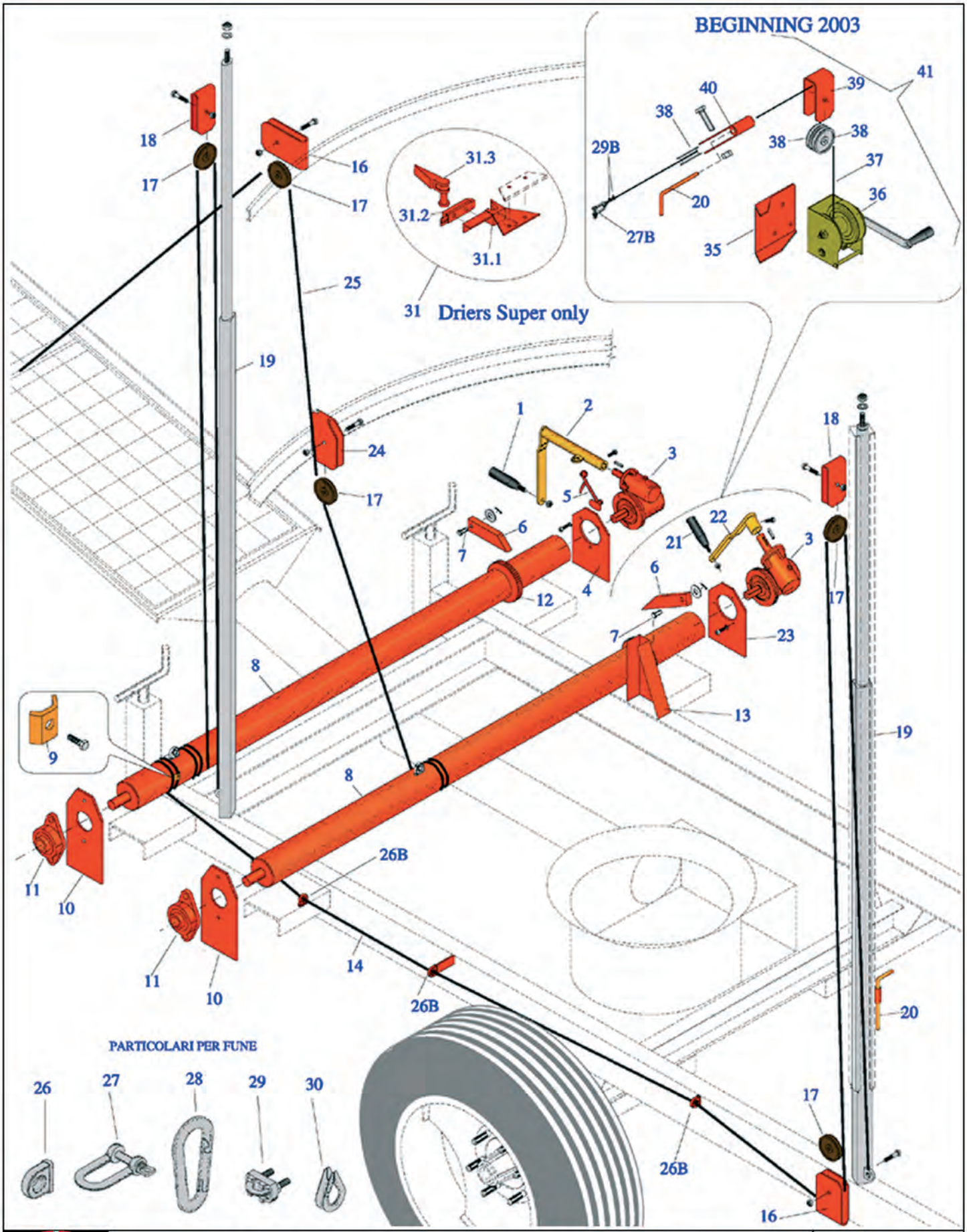

WINCHES FOR RETRACT SCREEN AND INTAKE HOPPER

TAB. 1A
2004

	WINCHES FOR RETRACT. SCREEN	JUNIOR-SUPER	TAB. 1A
		Sheet 1 of 1	2013

POS	DESCRIPTION	UM	Euro €
0	WIRE ROPE ø6	m	2,28
0	WIRE ROPE ø8	m	2,58
01	HANDLE M12	N	11,18
02	LEVER	N	73,62
03	GEAR WINCH	N	193,78
04	GEAR WINCH FIXING PLATE	N	41,09
05	SAFETY CLIP	N	6,48
06	SECURITY JACK ON WIRE-ROPE ROLLER	N	39,51
07	PIN	N	5,34
08	WIRE ROPE ROLLER	N	248,24
09	LOKING BRAKET ON WIRW ROPE	N	3,77
10	BEARING SUPPORT	N	22,93
11	BEARING UCFL 206 Ø 30 STND	N	24,75
12	TOOTHED WHEEL	N	44,94
13	SUPPORT FOR SECURITY JACK	N	21,74
14	WIRE ROPE FOR RETRACTABLE SCREN	N	47,91
15		N	
16	PULLEY HOLDER SUPPORT	N	21,26
17	ROPE PULLEY Ø 80	N	13,87
18	TOP PULLEY HOLDER	N	24,56
19	SLIDING RODS FOR TOP SCREEN LIFTING	N	153,37
20	SAFETY PIN	N	10,09
21	HANDLE M10	N	7,77
22	LEVER	N	63,20
23	GEAR WINCH FIXING PLATE	N	41,09
24	PULLEY HOLDER	N	30,39
25	WIRE ROPE FOR INTAKE HOPPER	N	31,94
26A	LIGHT UNIT	N	1,97
26B	INTERMEDIATE UNIT	N	2,35
26C	HEAVY UNIT	N	2,97
27A	FIXING BRACKET GALVANIZED Ø 8	N	2,77
27B	FIXING BRACKET GALVANIZED Ø 10	N	3,65
27C	FIXING BRACKET GALVANIZED Ø 12	N	4,93
28A	GALVANIZED BRAKET Ø 8	N	3,39
28B	GALVANIZED BRAKET Ø 10	N	4,93
29A	CLIPS Ø 6	N	0,87
29B	CLIPS Ø 8	N	1,27
30A	REDANCE Ø 6	N	0,43
30B	REDANCE Ø 8	N	0,73
31	SAFETY LOCKING FOR INTAKE HOPPER	N	105,46
31.1	BOLT SUPPORT	N	60,40
31.2	BOLT	N	31,64
31.3	LOCKING PIN	N	7,49
35	GEAR WINCH FIXING PLATE	N	15,79
36	GEAR WINCH	N	153,34
37	WIRE ROPE ø6	N	52,92
38	ROPE PULLEY WITH BEARING	N	12,41
39	DUOBLE TOP PULLEY HOLDER	N	40,78
40	MOBILE TOP PULLEY HOLDER	N	47,56
41	INTAKE HOPPER WINCHES KIT	N	359,68

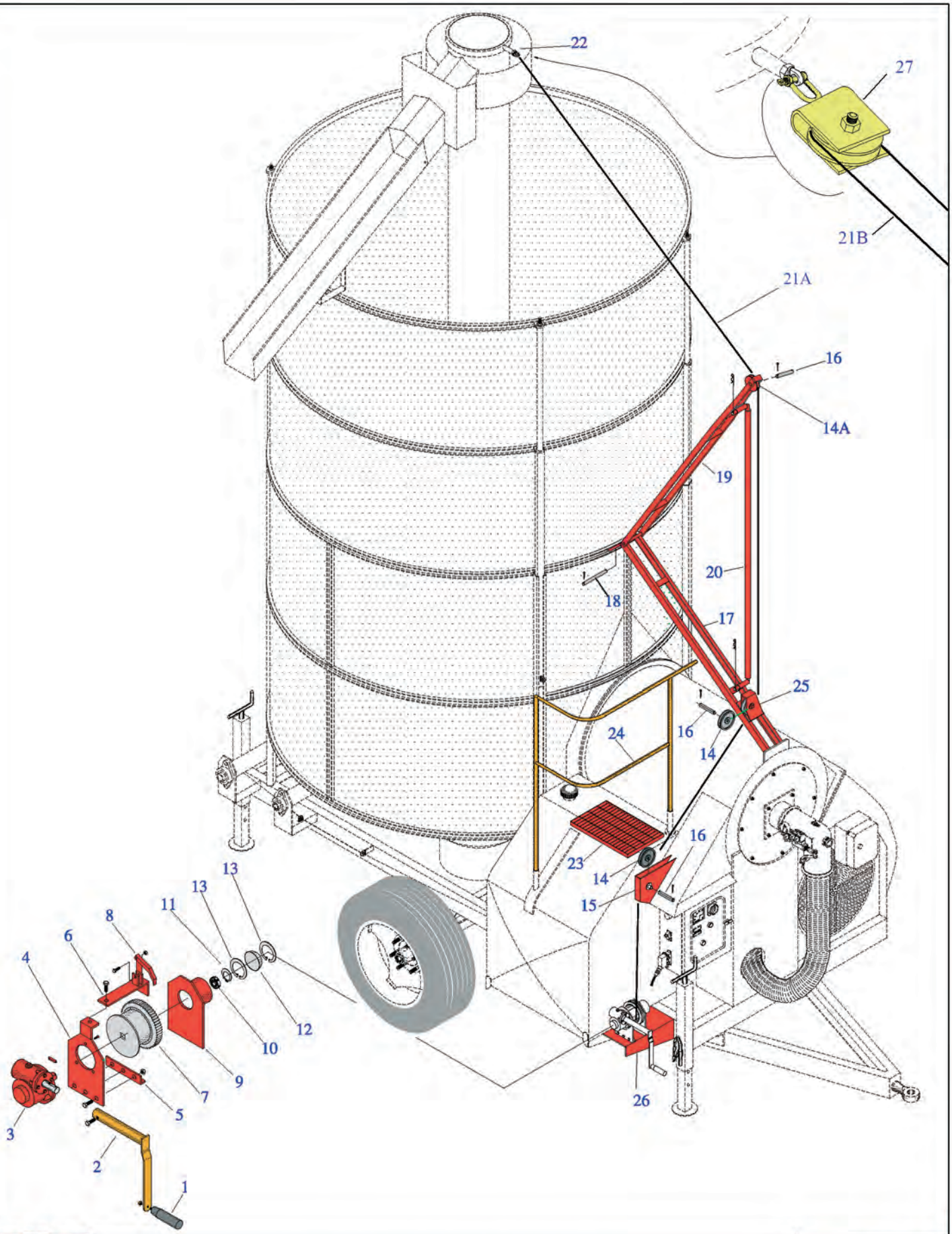

FP PEDROTTI ESSICCATOI

WINCHES FOR SPIRALS

TAB. 1B
2006

	WINCHES FOR SPIRALS	JUNIOR-SUPER	TAB.1B
		Sheet 1 of 1	2013

POS	DESCRIPTION	UM	Euro €
01	HANDLE M12	N	11,18
02	LEVER	N	81,55
03	GEAR WINCH	N	193,78
04	GEAR WINCH FIXING PLATE	N	48,21
05	"L" PLATE FIXING	N	10,57
06	SECURITY JACK HOLDER	N	10,07
07	WIRE ROPE ROLLER	N	158,46
08	SECURITY JACK ON WIRE ROPE ROLLER	N	28,35
09	BEARING FIXING PLATE	N	57,80
10	BEARING 6206 STND	N	12,43
11	CIRCLIP Ø 30 E	N	0,37
12	BEARING COVER Ø 62	N	2,06
13	CIRCLIP Ø 62 E	N	0,94
14	WIRE ROPE PULLEY Ø 120	N	32,96
14A	WIRE ROPE PULLEY Ø 120	N	32,96
15	PULLEY HOLDER SUPPORT	N	45,16
16	PIN Ø 20	N	13,66
17	FIX STEEL ROD FOR TOP AUGER WINCH	N	121,21
18	PIN	N	13,06
19	TILTING STEEL ROD FOR TOP AUGER WINCH	N	155,12
20	SUPPORTING ROD FOR TOP AUGER WINCH	N	97,94
21A	WIRE ROPE FOR TOP AUGER WINCH Ø 8 L=10,8m	N	63,70
21B	WIRE ROPE FOR TOP AUGER WINCH Ø 8 L=16m	N	96,66
22	WIRE HOOK	N	17,54
23	STEP 500X300	N	38,08
24	PROTECTION CAGE ON TOP OF FUEL TANK	N	128,60
25	TOP PULLEY HOLDER	N	32,37
26	SUPPORT PLATE	N	21,20
27	PULLEY HOLDER	N	55,64

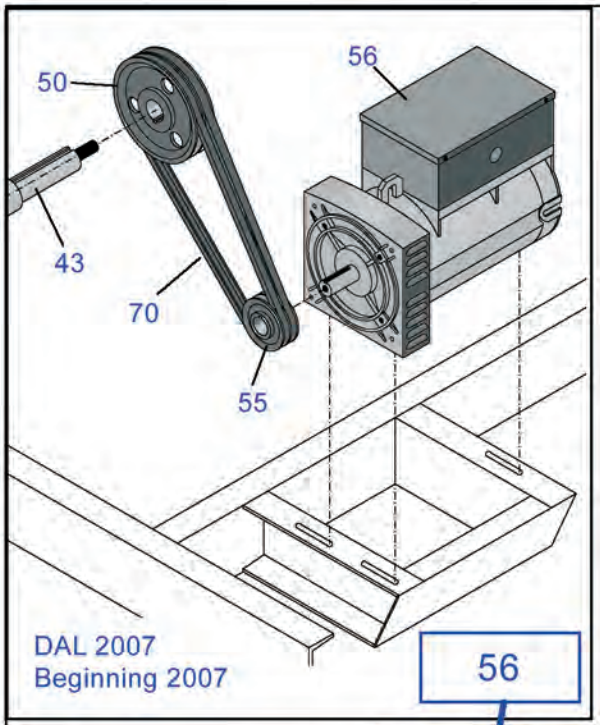

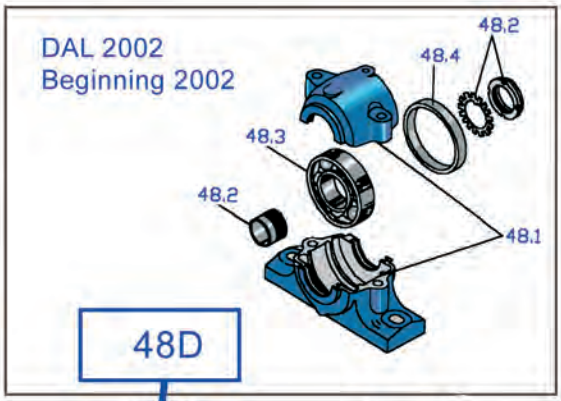

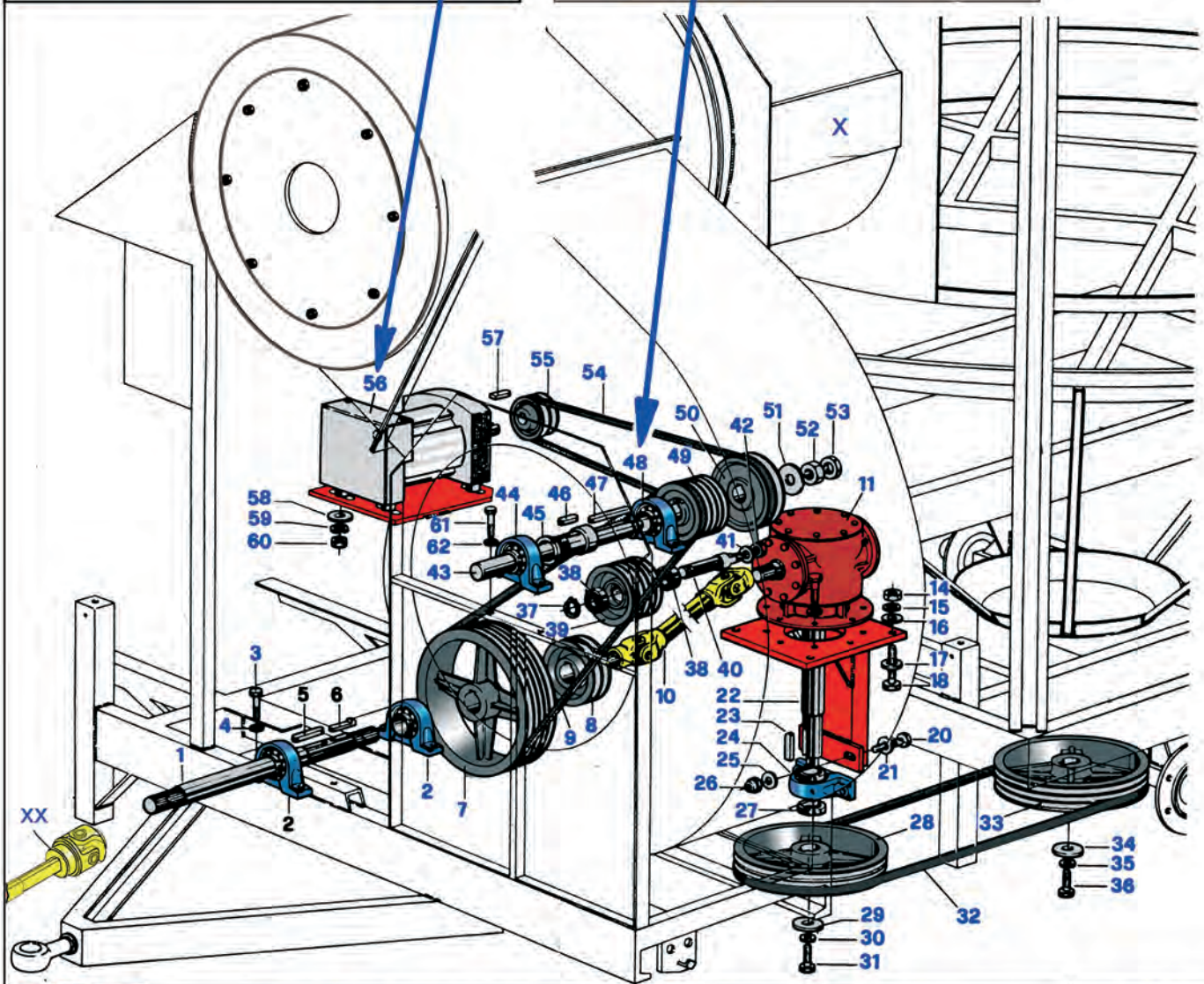

FP PEDROTTI ESSICCATOI

TRANSMISSION TO CENTRE AUGER TO THE FAN AND TO THE GENERATOR

TAB. 2
2009

	TRANSMISSION TO CENTRE AUGER, TO THE FAN AND TO THE GENERATOR	JUNIOR-SUPER	TAB.2
		Sheet 1 of 2	2013

POS	DESCRIPTION	UM	Euro €
01	POWER TAKE OFF SHAFT	N	213,67
02A	STAND UCP 210 Ø 50 STND	N	46,17
02B	STAND UCP 210 Ø 50 TOP QUALITY	N	127,57
03	BOLT 14X100	N	1,30
04	WASHER Æ14	N	0,10
05	KEY 10X10X60	N	3,88
06	KEY 10X10X90	N	7,18
07	PULLEY 400 4B (*)	N	275,65
08	PULLEY 170 2C	N	129,21
09	BELTS B83 TOP QUALITY (*) (**)	N	35,45
10	INTERMEDIATE CARDAN SHAFT L=540 mm	N	154,58
11A	GEARBOX (SEE DEATAILS TAB. 8)	N	1.217,28
11B	GEARBOX SUPPORT PLATE	N	293,81
11C	TENSION ROD	N	32,74
23	KEY 10X10X50	N	3,36
24A	BEARING UCP 210 Ø 50 STND	N	46,17
24B	BEARING UCP 210 Ø 50 TOP QUALITY	N	127,57
28	PULLEY B 400 4 RACES (*)	N	275,65
32	BELTS B112 TOP QUALITY (**)	N	46,23
33	PULLEY B 400 4 RACES (*)	N	301,82
37	CIRCLIP Ø 30 E	N	0,37
38A	BEARING 30X62X16 6206 2RS STND	N	12,43
38B	BEARING 30X62X16 6206 2RS TOP QUALITY	N	19,53
39	PULLEY 140 4B (*)	N	148,77
40	TENSION PULLEY SHAFT Ø 30	N	62,45
42	SELF LOCKING NUT M20X1,5	N	1,02
43	FAN SHAFT (*)	N	477,18
44A	BEARING UCP 207 STND	N	29,54
44B	BEARING UCP 207 TOP QUALITY	N	83,77
45	LOCKING RING	N	24,56
46	KEY 12X8X80	N	3,39
47	KEY 10X10X50	N	3,36
48A	BEARING UCP 210 STND	N	46,17
48B	BEARING UCP 210 TOP QUALITY	N	127,57
48D	BEARING SN 511 COMPLETE TOP QUALITY	N	299,95
48 D.1	BEARING SN 511 BODY	N	75,01
48 D.2	BUSH H 311	N	20,26
48 D.3	BEARING 55x100x25 22211 SKF	N	171,73
48 D.4	SPACER	N	22,47
49	PULLEY B 140 4 RACES (*)	N	114,14
50	PULLEY B 200 1 RACE DRIVING GENERATOR	N	80,27
50A	PULLEY B 200 2 RACE DRIVING GENERATOR	N	89,50
52	HEXAGON NUT M20X1,5	N	1,01
53	HEXAGON NUT M20X1,5	N	0,87
54A	BELTS B80 TOP QUALITY (*) (Mod.Generator) (*)	N	35,45
54B	BELTS BX57 TOP QUALITY (*) (Mod.12V)(see TAB.10) (*)	N	53,39
55A	PULLEY 90 1B Ø 24 Ch 8 (Mod.Generatore) (*)	N	79,20
55B	PULLEY 90 2B Ø 35 (Mod.12V)(See TAB.10)	N	90,07
56A	GENERATOR 6,5 KWA (Mod.Generator)(See TAB.12)	N	985,50
56B	GENERATOR 12 KWA (Mod.Generator)(See TAB.12)	N	1.394,30
70	BELTS BX 77 TOP QUALITY	N	65,18

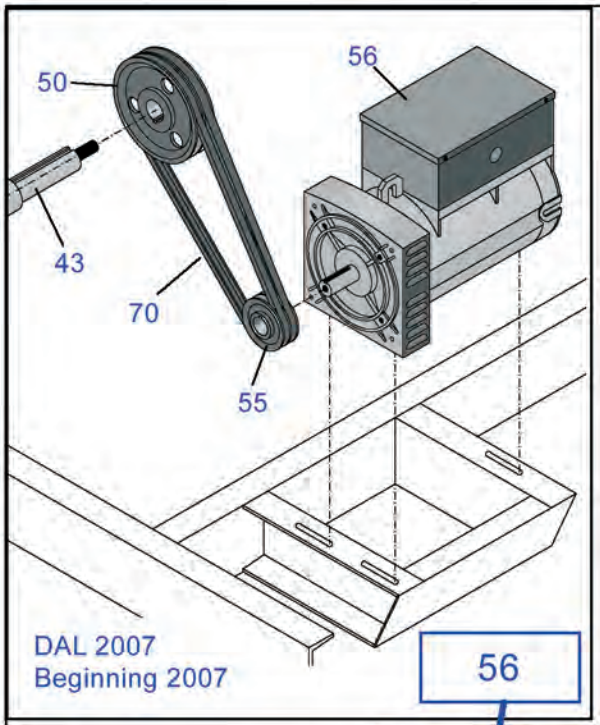

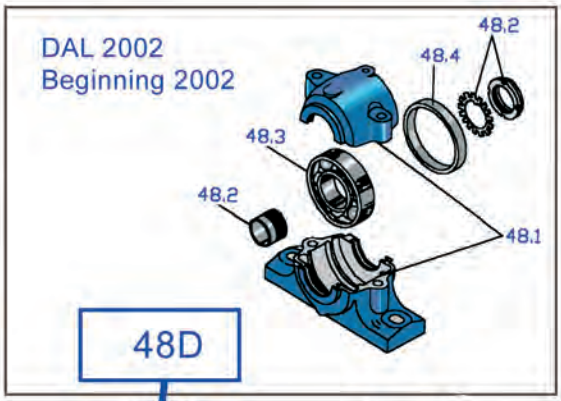

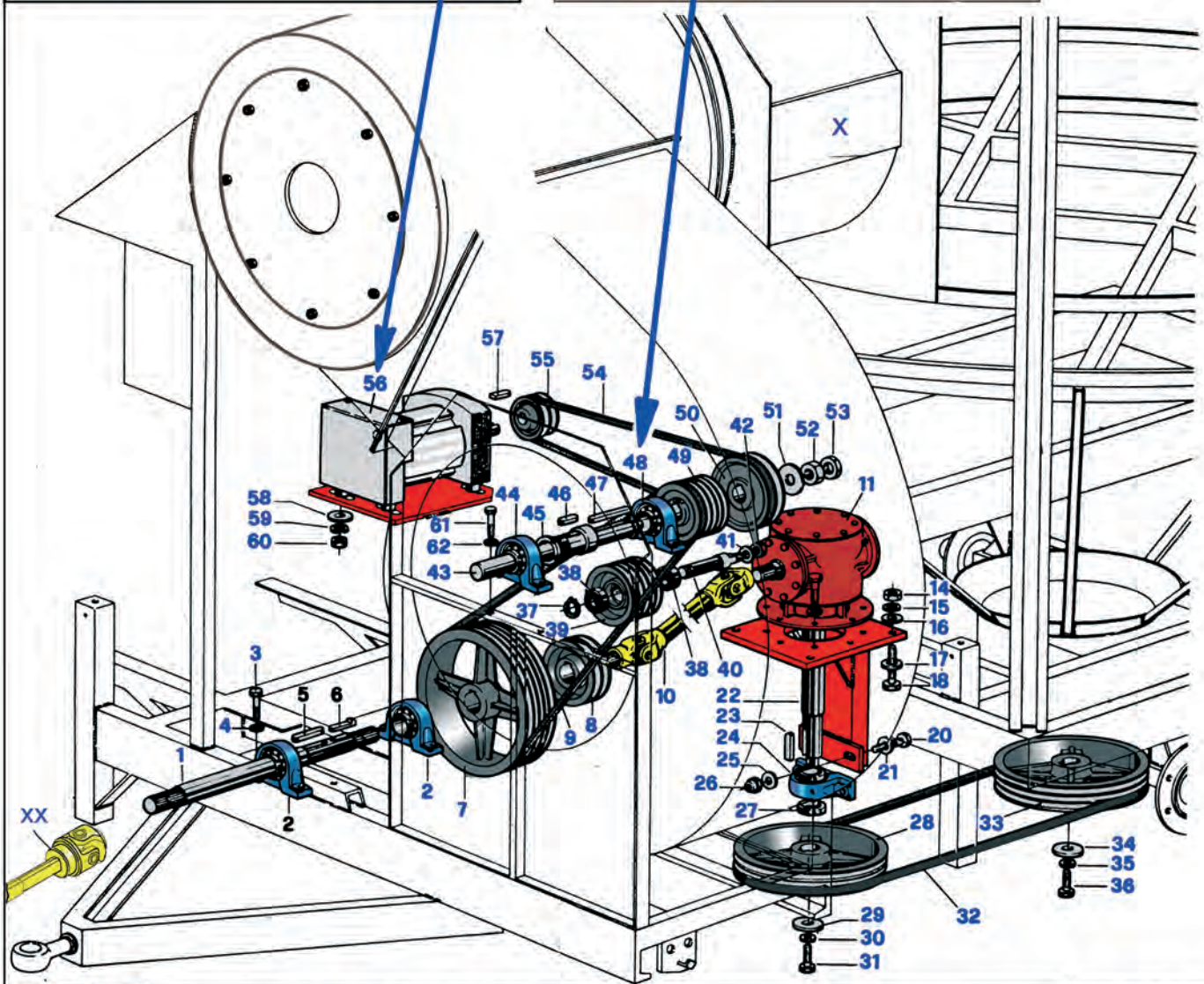

FP PEDROTTI ESSICCATOI

TRANSMISSION TO CENTRE AUGER TO THE FAN AND TO THE GENERATOR

TAB. 2
2009

	TRANSMISSION TO CENTRE AUGER, TO THE FAN AND TO THE GENERATOR	JUNIOR-SUPER	TAB.2
		Sheet 2 of 2	2013

POS	DESCRIPTION	UM	Euro €
	OTHER ITEMS		
x	SIDE CONVEYOR C/E DEFLECTORS	N	99,02
xx	FRONT PTO CARDAN SHAFT (L=1300mm)	N	377,23
	*** (ITEM FOR MOD. "JUNIOR")**		
7	PULLEY B 400 3 RACES	N	295,98
9	BELT B86 TOP QUALITY	N	38,80
28	PULLEY B 400 3 RACES	N	206,28
33	PULLEY B 400 3 RACES	N	295,98
39	PULLEY B 140 3 RACES	N	99,87
43	FAN SHAFT JUNIOR	N	477,18
49	PULLEY B 106 3 RACES	N	84,65
54A	BELT B69 TOP QUALITY (Mod.Generator)	N	31,30
54B	BELT BX51 TOP QUALITY (Mod.12V)	N	48,24
55A	PULLEY B 106 1 RACE (Mod.Generator)	N	48,30
	**** (ITEM FOR MOD. "SUPER 150")**		
9	BELT B86 TOP QUALITY	N	38,80
32	BELT B124 TOP QUALITY	N	54,76

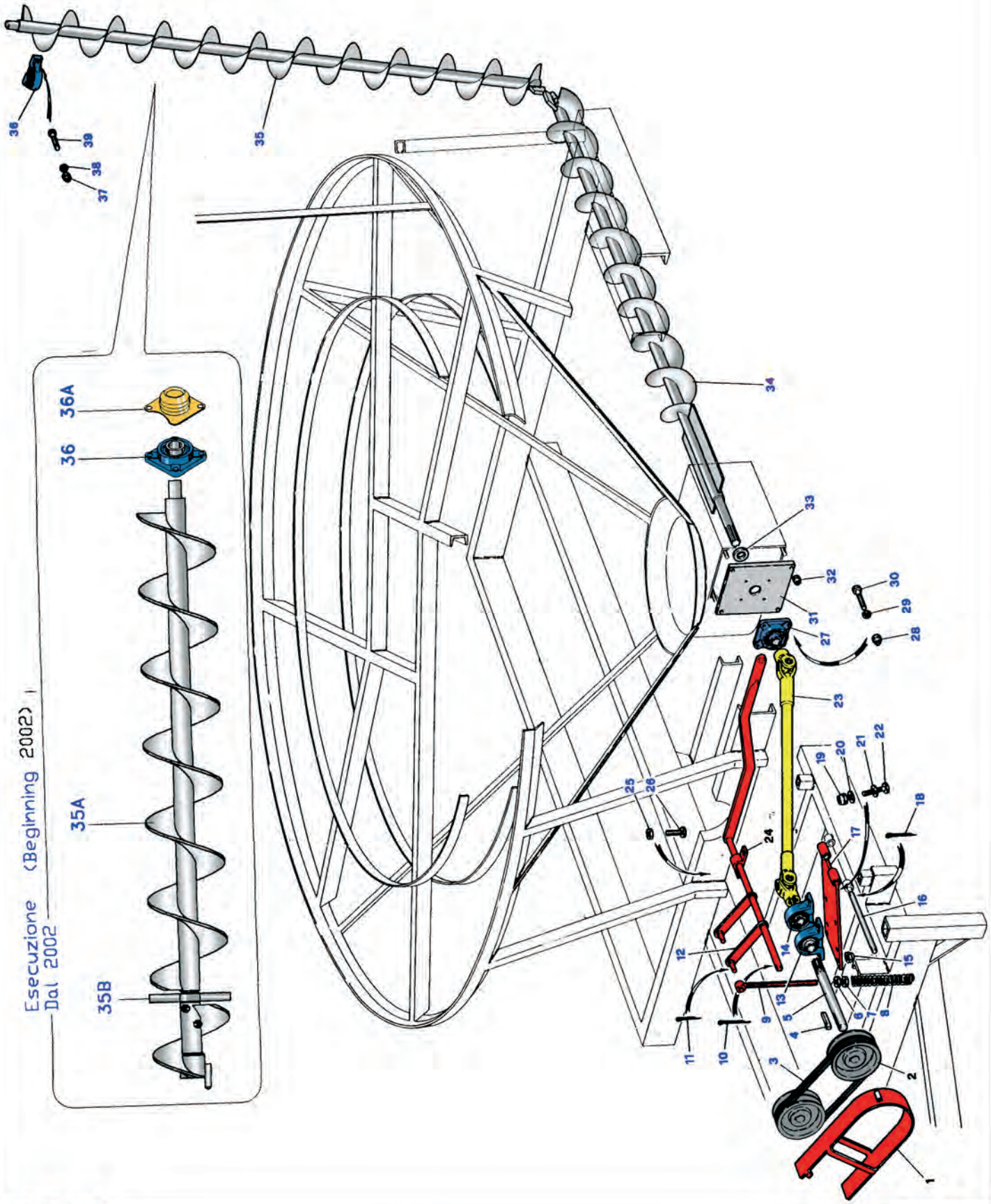

FP PEDROTTI ESSICCATOI

FILLING AUGER

TAB. 3
2004

	FILLING AUGER	JUNIOR-SUPER	TAB.3
		Sheet 1 of 1	2013

POS	DESCRIPTION	UM	Euro €
01	PROTECTION GUARD	N	74,54
02	PULLEY C 170 2 RACES (*)	N	129,21
03	BELT C 48 TOP QUALITY	N	29,44
04	KEY 10X10X50	N	3,36
05	SHAFT Ø 35 L=350	N	55,74
06	HEXAGON NUT M18	N	0,58
07	LOCK NUT M18	N	0,34
08	RETURN SPRING 19X180	N	5,62
09	TENSION ROD	N	26,87
10	SPLIT PIN Ø 4X30	N	0,37
11	SPLIT SPIN Ø 4X30	N	0,37
12	ENGAGING LEVER	N	109,43
13	BEARING UCP 207 Ø 35 STND	N	29,54
14	BEARING UCP 207 Ø 35 STND	N	29,54
15	SELF LOCKING NUT M18	N	0,58
16	FIXING PIN FOR MOVABLE PLATE	N	32,15
17	MOVABLE PLATE	N	108,22
18	FIXING PIN	N	0,37
19	SELF LOCKING NUT M12	N	0,27
22	BOLT 12X40 MA	N	0,49
23	CARDAN SHAFTL= 900 mm	N	128,37
24	IRON STAND	N	30,25
25	HEXAGON NUT M10	N	0,05
26	BOLT M8X30	N	0,16
27	BEARING UCF 207 Ø 35 STND	N	36,15
28	HEXAGON NUT M12	N	0,10
30	BOLT M12X35	N	0,49
31	INOX COVER	N	38,52
32	HEXAGON NUT 14 MA	N	0,10
33	SPACER Ø 35	N	6,20
34	FIX LOADING AUGER 48X170 (*)	N	207,86
35	TILTING LOADING AUGER 48X170 (*)	N	238,73
35A	TILTING LOADING AUGERØ 200 WHITH CROSS BEARIN, COMPLETE (*)	N	472,78
35B	CROSS BEARING ON FILLING AUGER WHITH BEARING BRASS	N	76,62
35B.1	CROSS BEARING ON FILLING AUGER WHITH BEARING TOP QUALITY	N	127,25
36	BEARING UCF 206 Ø 30 STND (*)	N	26,12
36A	BEARING COVER	N	20,00
37	HEXAGON NUT M10	N	0,06
39	BOLT M10X18	N	0,24
	* (ITEM FOR MOD. "JUNIOR")		
02	PULLEY 190 1C	N	170,33
34	FIX LOADING AUGER Ø 125	N	203,48
35	TILTING LOADING AUGER Ø 125	N	219,78
35A	TILTING LOADING AUGER Ø 125 WHITH CROSS BEARIN, COMPLETE	N	432,40
36	BEARING UCF 205 Ø 25 STND	N	20,89

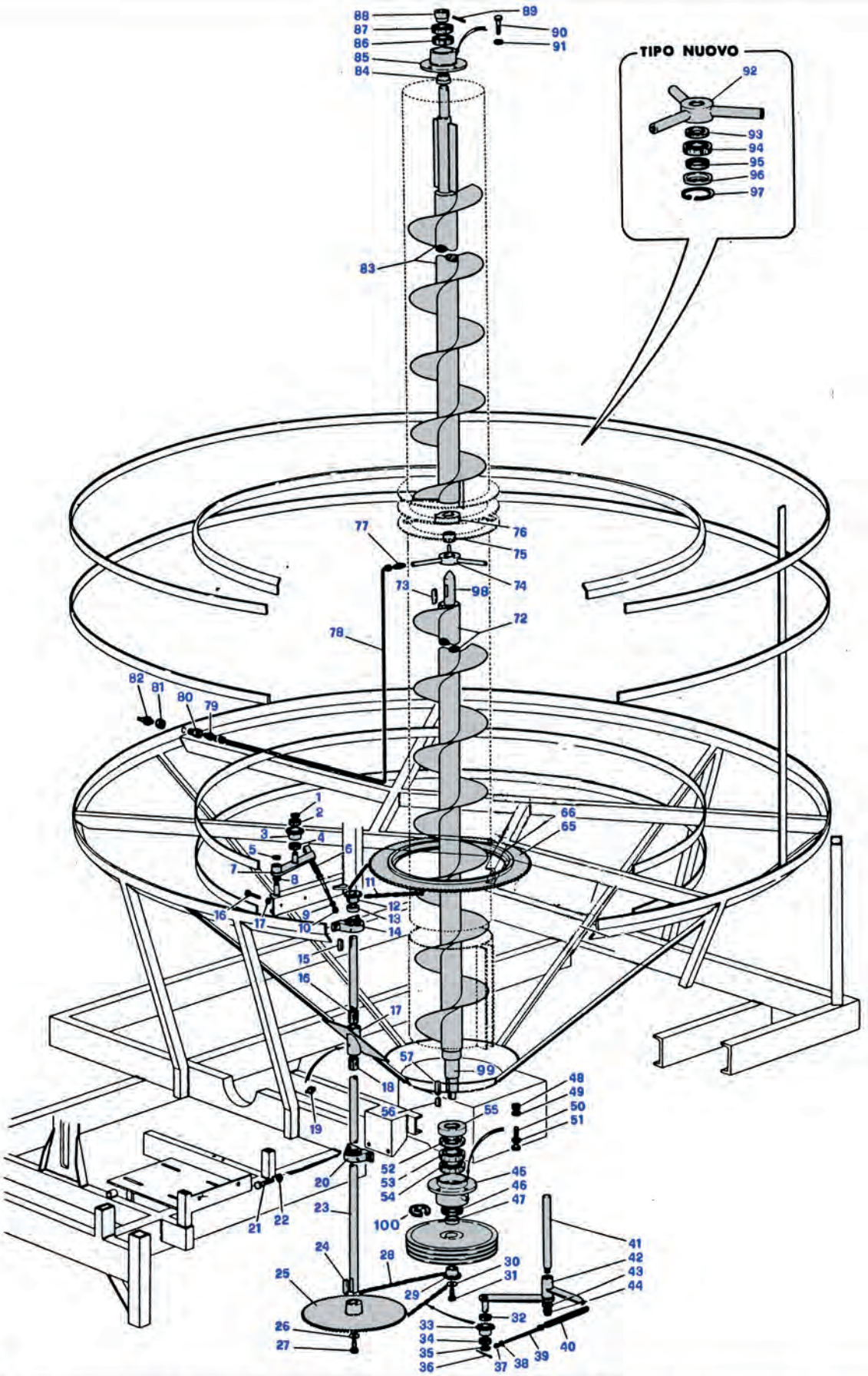

FP PEDROTTI ESSICCATOI

CENTRE AUGER - INTERNAL GEAR TRASMISSION BY CHAINS

TAB. 4
2004

	CENTRE AUGER - INTERNAL GEAR TRANSMISSION BY CHAIN	JUNIOR-SUPER	TAB. 4
		Sheet 1 of 2	2013

POS	DESCRIPTION	UM	Euro €
01	CIRCLIP Ø 20 E	N	0,23
02	BEARING 20X42X16 2RS - 63004 STND	N	29,46
03	PINION Z 11 ¾	N	66,70
05	CIRCLIP Ø 42 I	N	0,74
06	SPRING Ø 25 L. 250	N	21,30
07	IRON CHAINSTRETCHER ARM	N	90,17
08	CIRCLIP Ø 20 e	N	0,23
11	CHAIN ¾ ASA REINFORCED	N	117,67
12	CASEHARDENED PINION Z11 ¾	N	82,17
13	SPACER Ø 30	N	4,10
14	BEARING UCPX 206 Ø 30	N	175,38
15	KEY 8X7X35	N	1,74
17	IRON INTERMEDIATE STAND	N	45,82
19	GREASER C/W NIPPLE	N	0,93
20A	BEARING UCP 206 Ø 30 STND	N	25,24
20B	BEARING UCP 206 Ø 30 TOP QUALITY	N	71,36
21	BOLT 12X40	N	0,39
23	DRIVE SHAFT Ø 30 (*)	N	125,49
24	KEY 8X8X50	N	1,93
25	SPROCKET Z 75 ¾	N	318,25
27	BOLT M10X25	N	0,17
28	CHAIN ¾ ASA	N	71,41
29	CASEHARDENED PINION Z 11 3/4	N	82,17
31	BOLT M10X25 TE	N	0,17
32	BEARING 20X42X12 6004 2RS STND	N	4,20
33	PINION Z11 NEUTRAL	N	66,70
34	BEARING 20X42X12 6004 2RS STND	N	4,20
39	TENSION ROD	N	11,78
40	TENSIONING SPRING	N	3,72
42	TENSIONING LEVER	N	108,61
44	BOLT M16X25 TE	N	0,63
45	IRON BASE STAND (*) (assembled see TAB 00)	N	237,26
46	SEAL 70X100X12 (*)	N	6,19
47	SPACER 60x70 (*)	N	14,66
48	HEXAGON NUT M14	N	0,15
50	BOLT M14X45 TE	N	0,68
52	SEAL 75X110X12 (*)	N	7,64
53A-54A	BEARING 60X110X22 7212 B STND(*)	N	61,90
53B-54B	BEARING 60X110X22 7212 B SKF (*)	N	227,94
55	DUST COVER Ø 90 (*)	N	21,84
56	KEY 8X7X35	N	1,74
57	KEY 10X10X35	N	3,00
65	CROWN GEAR Z 115 ¾	N	386,49
66	THRUST BEARING	N	422,76
72	BOTTOM SPIRAL 330X330X90 (*) (see TAB 00)	N	1.491,82
73	KEY 10x10x25	N	2,91
74	BEARING HOUSING (*)	N	219,77
76	DRIVING JACK (*)	N	54,55
77	TWIN NIPPLE ¼	Kg	10,46
78	COPPER PIPE Ø 8	N	44,71
79	TWIN NIPPLE ¼	N	4,33

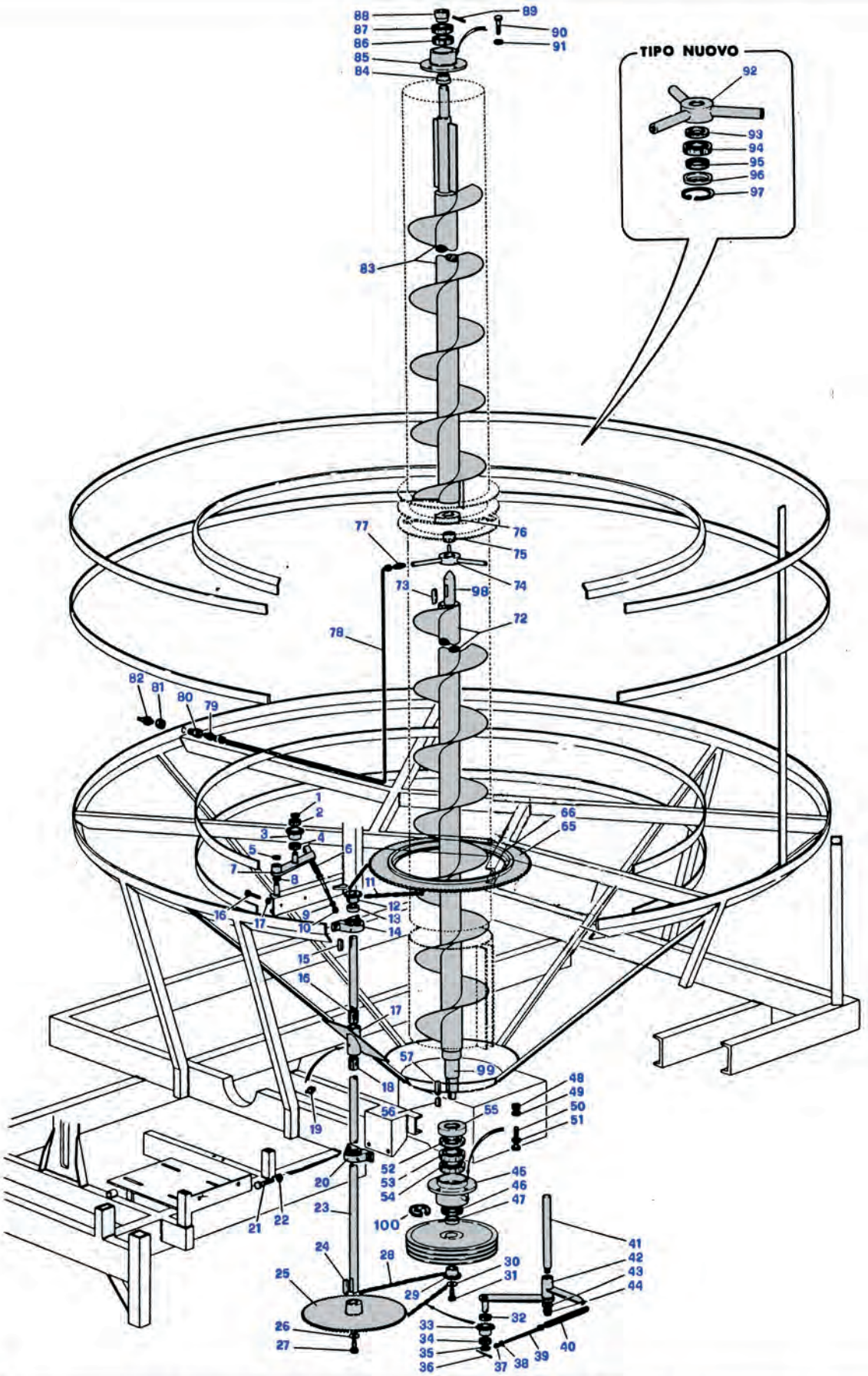

FP PEDROTTI ESSICCATOI

CENTRE AUGER - INTERNAL GEAR TRASMISSION BY CHAINS

TAB. 4
2004

POS	DESCRIPTION	UM	Euro €
80	BOLT M12X35 / FEMALE NIPPLE ¼	N	7,45
82	GREASER	N	0,58
83	UPPER SPIRAL L=3010 (*) (see TAB 00)	N	1.259,70
84	SPACER Ø 40	N	12,72
85	TOP BEARING HOUSING (*) (see TAB 00)	N	115,59
85A	SEAL 50X80X8	N	6,15
85B	SEAL 50X72X8	N	6,01
85C-D	CIRCLIP Ø 80 I	N	1,95
86A-87A	BEARING 40X80X18 1208 STND beginning "94 (see Tab.4A)	N	42,16
86B-87B	BEARING 40X80X18 1208 TOP QUALITY beginning "94 (see Tab.4A)	N	69,53
88	UPPER SPACER Ø 40	N	16,79
89	PIN Ø8X60	N	0,49
90	BOLT M12X40 TE	N	0,39
92	BEARING HOUSING (*)	N	133,13
93-95	SEAL 35X47X7 2 PROFILI	N	5,29
94A	BEARING 35X72X17 6207 STND (*)	N	16,61
94B	BEARING 35X72X17 6207 TOP QUALITY (*)	N	18,51
96	CAP Ø 72 (*)	N	14,74
97	CIRCLIP Ø 72 i (*)	N	1,31
98	TOP PIN FOR CENTRAL SPIRAL (*)	N	106,17
99	BOTTOM PIN FOR CENTRAL SPIRAL (*)	N	157,20
	*** (ITEM FOR MOD. "JUNIOR")**		
23	DRIVE SHAFT Ø 30 JUNIOR	N	125,49
45	IRON BASE STAND JUNIOR	N	191,75
46	SEAL 50X80X8	N	5,52
47	SPACER 50X58	N	10,34
52	SEAL 60X90X10	N	5,80
53A-54A	BEARING 50X90X20 7210B STND	N	44,69
53B-54B	BEARING 50X90X20 7210B TOP QUALITY	N	183,82
55	DUST COVER Ø 70	N	21,78
72	BOTTOM SPIRAL 280X280X70	N	1.179,78
74	BEARING HOUSING JUNIOR	N	202,90
76	DRIVING JACK JUNIOR	N	42,45
83	TOP SPIRAL 280X280X70 L=3010	N	1.053,80
85A	BEARING UCF 208 Ø 40 STND	N	36,68
85B	BEARING UCF 208 Ø 40 TOP QUALITY	N	87,23
92	BEARING HOUSING JUNIOR	N	130,12
94A	BEARING 35X62X14 6007 STND	N	11,65
94B	BEARING 35X62X14 6007 TOP QUALITY	N	14,82
95	SEAL 35X47X7	N	5,29
96	CAP Ø 62	N	13,11
97	CIRCLIP Ø 62 I	N	0,94
98	TOP PIN Ø 70	N	80,53
99	BOTTOM PIN Ø 70	N	110,36

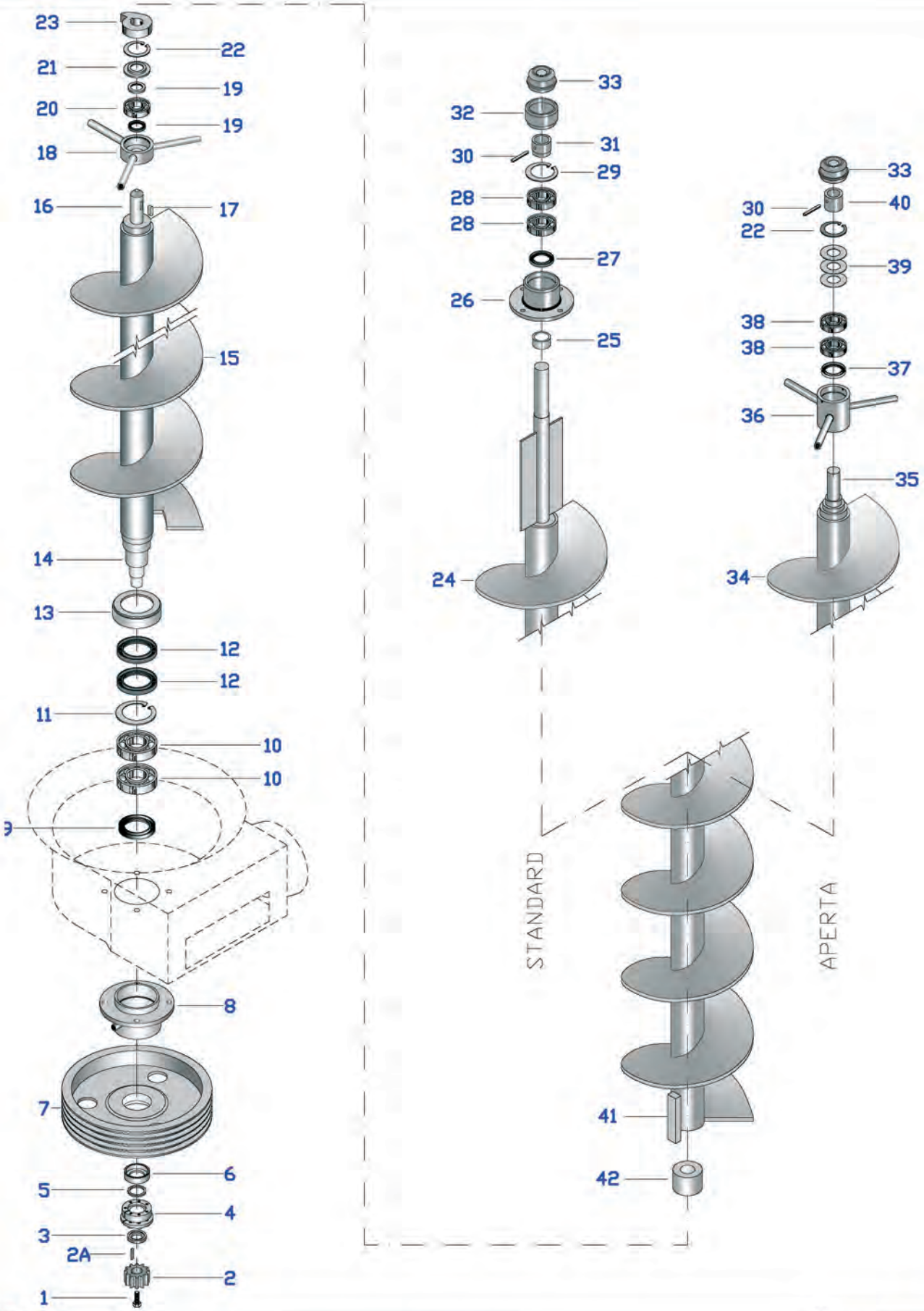

FP PEDROTTI ESSICCATOI

CENTRE AUGER

TAB. 4A
2004

	CENTRE AUGER	JUNIOR-SUPER	TAB. 4A
		Sheet 1 of 2	2013

POS	DESCRIPTION	UM	Euro €
01	BOLT M12X1,25X35 (*)	N	0,29
02	CASEHARDENED PINION Z 12 M5	N	64,42
2A	KEY 8X8X35	N	1,74
03	SPACER FOR VIBLOCK	N	9,42
04	VIBLOCK	N	34,38
05	SPACER FOR VIBLOCK	N	3,51
06	BOTTOM SPACER (*)	N	14,66
07	PULLEY B 400 4 RACES FOR VIBLOCK (*)	N	295,49
08	IRON BASE STAND (*) (assembled see TAB 00)	N	237,26
09	SEAL 70X100X12 (*)	N	6,19
10A	BEARING 60X110X22 7212 B STDN (*)	N	61,90
10B	BEARING 60X110X22 7212 B TOP QUALITY	N	227,94
11	CIRCLIP Ø 110 I (*)	N	3,91
12	SEAL 75X110X12 (*)	N	7,64
13	DUST COVER Ø 90 (*)	N	21,84
14	BOTTOM PIN FOR CENTRAL SPIRAL (*)	N	157,20
15	BOTTOM SPIRAL (*) (see TAB 00)	N	1.491,82
15A	SPIRAL Øe 330 øi 89	m	122,28
16	TOP PIN FOR CENTRAL SPIRAL (*)	N	106,17
17	KEY 10X10X25 (*)	N	2,91
18	BEARING HOUSING (*) (see TAB 00)	N	133,13
19	SEAL 35X47X7 2 PROFILI	N	5,29
20A	BEARING 35X72X17 6207 STND (*)	N	16,61
20B	BEARING 35X72X17 6207 TOP QUALITY (*)	N	18,51
21	CAP Ø 72 (*)	N	14,74
22	CIRCLIP Ø 72 I (*)	N	1,31
23	DRIVING JACK (*)	N	54,55
23A	DOUBLE DRIVING JACK	N	60,47
24	UPPER SPIRAL L=3010 (*) (see TAB 00)	N	1.259,70
25	SPACER Ø 40	N	12,72
26	TOP BEARING HOUSING	N	115,59
27	SEAL 50X72X8	N	6,01
28A	BEARING 40X80X23 2208 STND beginning 1994	N	36,68
28B	BEARING 40X80X23 2208 TOP QUALITY beginning 1994	N	107,48
28C	BEARING 40X80X18 1208 STND until 1994	N	42,16
28D	BEARING 40X80X18 1208 TOP QUALITY until 1994	N	69,53
29	CIRCLIP Ø 80 I	N	1,95
30	PIN Ø8X60	N	0,49
31	UPPER SPACER Ø 40	N	16,79
32	BUSH	N	25,43
33	BEARING TOP COVER Ø 72	N	3,07
34	TOP SECTION CENTRE AUGER (*) (see TAB 00)	N	1.316,63
35	TOP PIN FOR CENTRE AUGER (*)	N	115,07
36	TOP BEARING HOUSING (see TAB 00)	N	160,30
37	SEAL 45X66X10	N	4,04
38A	BEARING 35X72X23 2207 2RS STND beginning 1994	N	28,54
38B	BEARING 35X72X23 2207 2RS TOP QUALITY beginning 1994	N	88,88
38C	BEARING 35X72X17 1207 2RS STND until 1994	N	33,42
38D	BEARING 35X72X17 1207 2RS TOP QUALITY until 1994	N	62,23

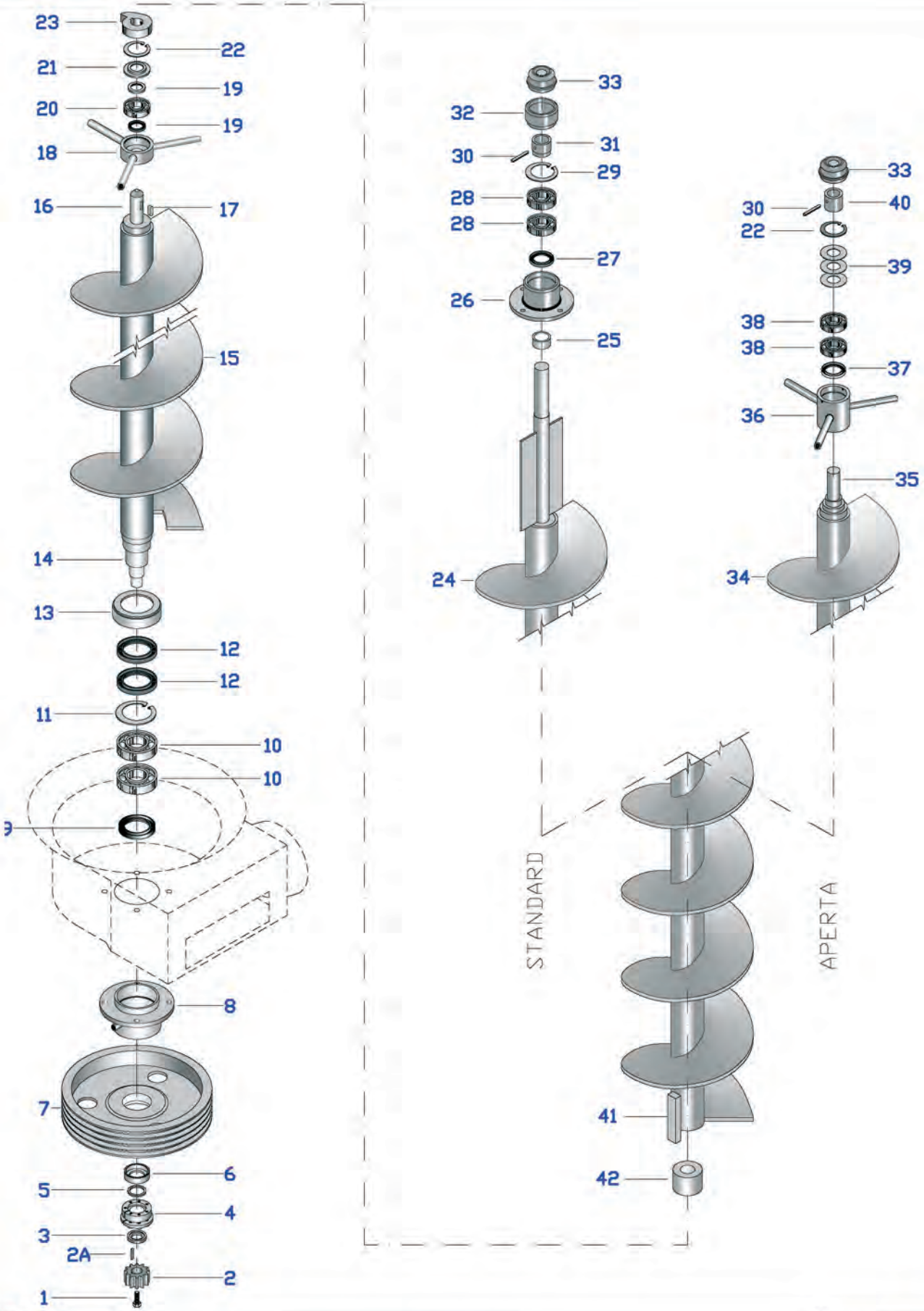

FP PEDROTTI ESSICCATOI

CENTRE AUGER

TAB. 4A
2004

POS	DESCRIPTION	UM	Euro €
39	SPACER Ø 71,7X60,3X1 mm	N	2,45
40	UPPER SPACER Ø 35	N	16,11
41	DRIWING PLATE PIN	N	10,90
42	INNER BUSH	N	32,34
	*** (ITEM FOR MOD. "JUNIOR")**		
1	BOLT M10	N	0,24
6	SPACER JUNIOR	N	10,34
7	PULLEY B 400 3 RACES	N	295,98
8	IRON BASE STAND JUNIOR	N	191,75
9	SEAL 58x80x8	N	5,52
10A	BEARING 50x90x20 7210 STND	N	44,69
10B	BEARING 50x90x20 7210 TOP QUALITY	N	183,82
11	CIRCLIP Ø 90 i	N	3,76
12	SEAL 60x90x10	N	5,80
13	DUST COVER Ø 70	N	21,78
14	BOTTOM PIN FOR CENTRAL SPIRAL	N	110,36
15	BOTTOM SPIRAL JUNIOR	N	1.179,78
16	TOP PIN FOR CENTRAL SPIRAL Ø 70	N	80,53
17	KEY 10x8x25	N	2,61
18	BEARING HOUSING JUNIOR	N	130,12
20	BEARING 35x62x14 6007	N	11,65
21	CAP	N	13,11
22	CIRCLIP Ø 62 i	N	0,94
23	DRIVING JACK JUNIOR	N	42,45
24	UPPER SPIRAL JUNIOR	N	1.053,80
34	TOP SECTION CENTRE AUGER JUNIOR	N	1.067,95
35	TOP PIN FOR CENTRE AUGER Ø 70	N	75,50

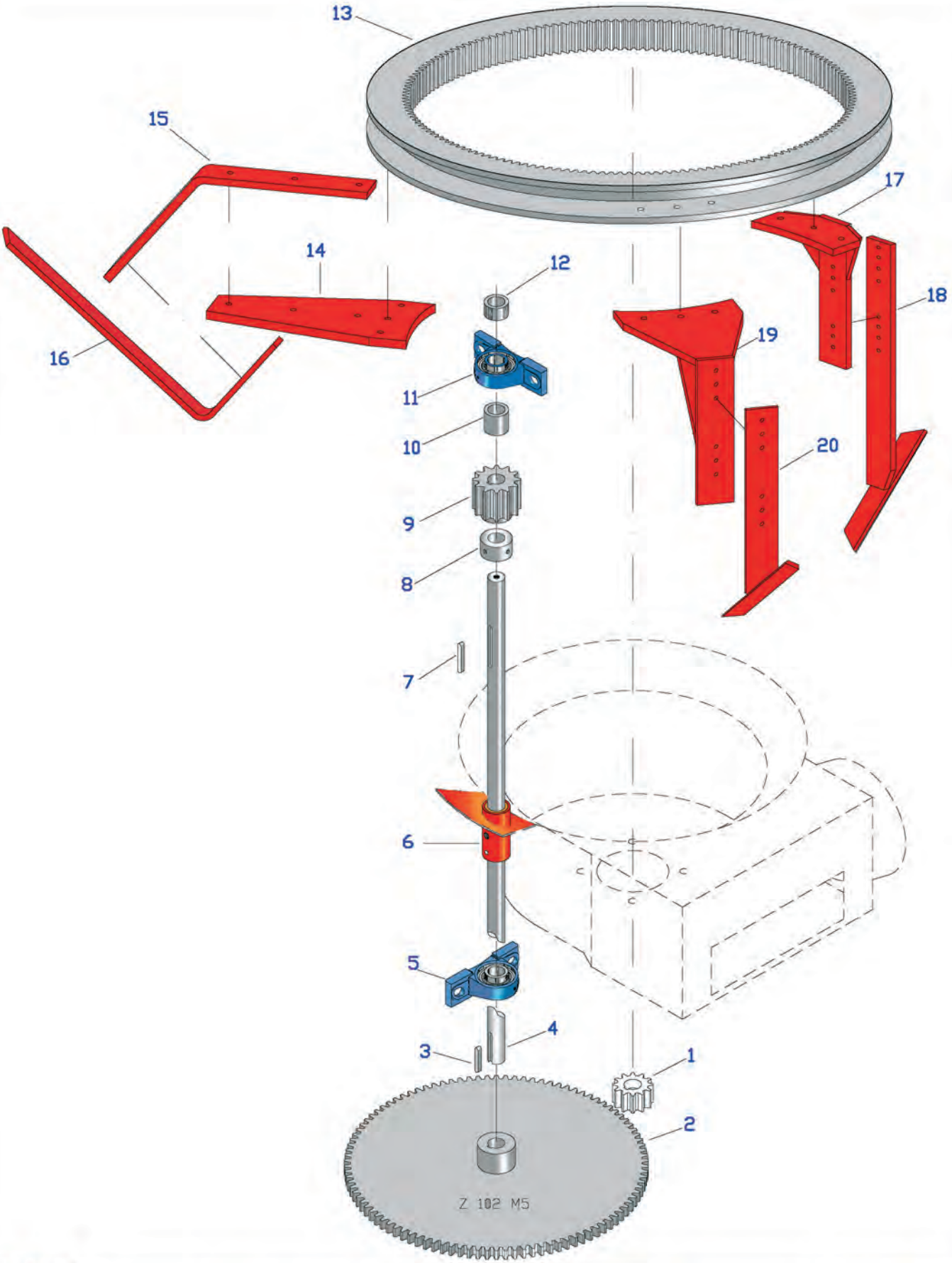

FP PEDROTTI ESSICCATOI

AGITATORS - INTERNAL GEAR TRASMISSION BOTTOM BY PINION

TAB. 4B
2004

	AGITATORS - INTERNAL GEAR TRANSMISSION BOTTOM BY PINION	JUNIOR-SUPER Sheet 1 of 1	TAB. 4B 2013

POS	DESCRIPTION	UM	Euro €
01	CASEHARDENED PINION Z 12 M5	N	64,42
02	SPROCKET Z 102 M5	N	824,42
03	KEY 8X8X50	N	1,93
04	DRIVING SHAFT Ø 30	N	128,22
05A	BEARING UCP 206 Ø 30 STND	N	25,24
05B	BEARING UCP 206 Ø 30 TOP QUALITY	N	71,36
06	IRON INTERMEDIATE STAND	N	45,82
07	KEY 8X8X70	N	2,42
08	SPACER FOR PINION Z12 M6	N	18,90
09	CASEHARDENED DRIVING PINION Z 12 M6	N	103,11
10	SPACER Ø 42 L=40	N	10,15
11A	BEARING UCP 206 Ø 30 STND	N	25,24
11B	BEARING UCP 206 Ø 30 TOP QUALITY	N	71,36
12	SPACER Ø42 L=25	N	10,15
13	TOOTHED GEAR Z 108 M6 Ø 800	N	1.828,65
14	PART OF AGITATOR ARM	N	78,27
15	PART OF AGITATOR ARM	N	122,81
16	PART OF AGITATOR ARM	N	112,61
17	PART OF AGITATOR ARM	N	90,83
18	PART OF AGITATOR ARM	N	78,69
19	PART OF AGITATOR ARM	N	113,30
20	PART OF AGITATOR ARM	N	71,20

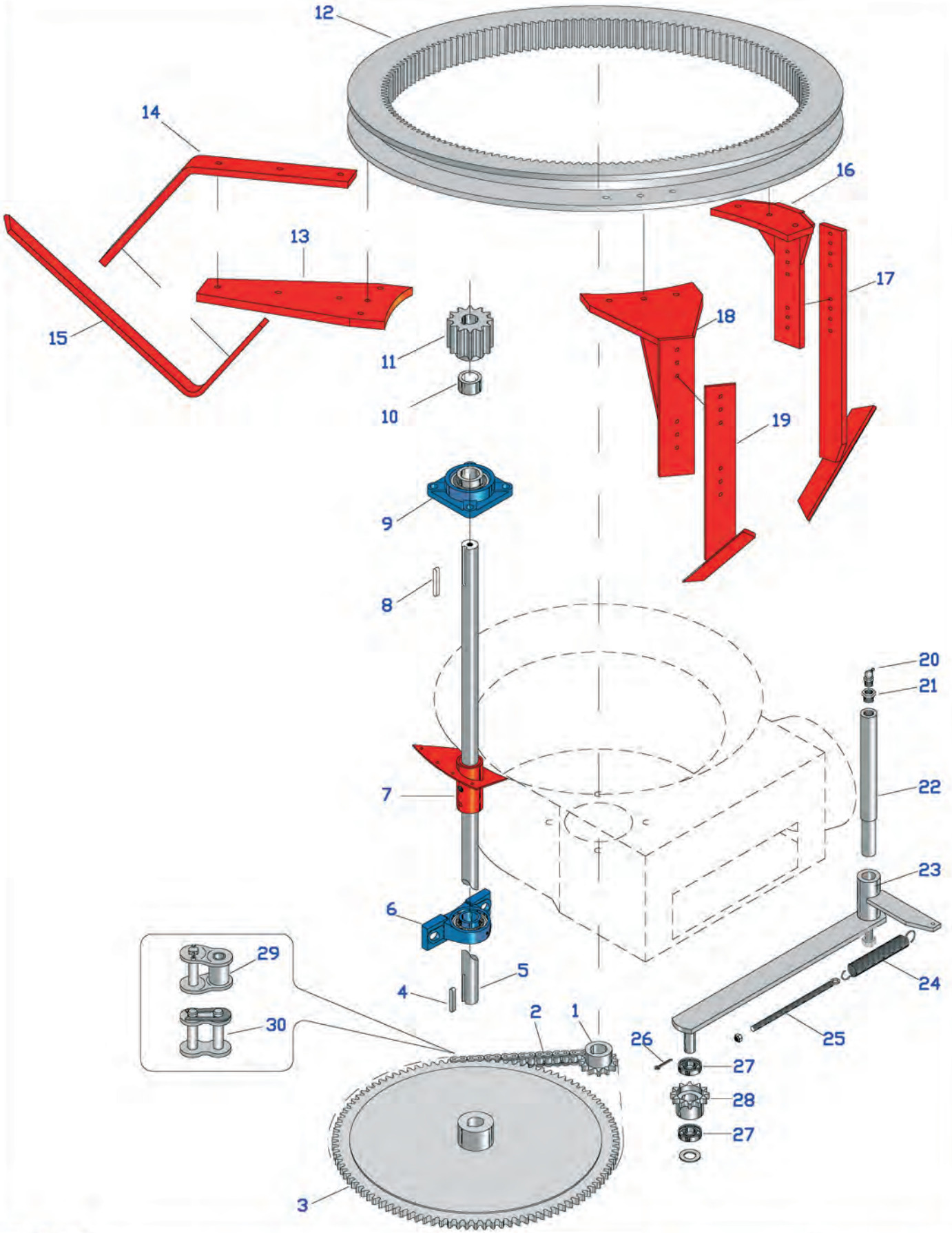

FP PEDROTTI ESSICCATOI

AGITATORS - INTERNAL GEAR TRASMISSION BOTTOM BY CHAIN

TAB. 4C
2004

	AGITATORS - INTERNAL GEAR TRANSMISSION BOTTOM BY CHAIN	JUNIOR-SUPER Sheet 1 of 1	TAB. 4C 2013

POS	DESCRIPTION	UM	Euro €
	MOD. SUPER 150 :Since production 1998		
01	CASEHARDENED PINION Z11 ¾	N	82,17
02	CHAIN ¾ ASA	N	71,41
03	SPROCKET Z 75 ¾	N	318,25
04	KEY 10X8X50	N	2,91
05	DRIVING SHAFT	N	150,60
06A	BEARING UCP 207 STND	N	29,54
06B	BEARING UCP 207 TOP QUALITY	N	83,77
07	IRON INTERMEDIATE STAND Ø 35	N	59,50
08	KEY 10X8X60	N	3,15
09A	BEARING UCF 206 NACHI-FYH	N	59,58
09B	BEARING UCF 206 TOP QUALITY	N	87,42
10	SPACER Ø 42 L=40	N	10,15
11	CASEHARDENED DRIVING PINION Z 14 M6	N	110,05
12	TOOTHED GEAR Z 156 M6 Ø 1100	N	2.621,07
13	PART OF AGITATOR ARM	N	78,27
14	PART OF AGITATOR ARM	N	122,81
15	PART OF AGITATOR ARM	N	116,27
16	PART OF AGITATOR ARM	N	90,83
17	PART OF AGITATOR ARM	N	78,69
18	PART OF AGITATOR ARM	N	113,30
19	PART OF AGITATOR ARM	N	71,20
20	GREASER Ø 1/4	N	2,07
21	REDUCTION 3/8"-1/4"	N	1,12
22	TENSIONING SUPPORT	N	62,84
23	TENSIONING LEVER	N	108,61
24	TENSIONING SPRING	N	3,72
25	TENSION ROD	N	11,78
26	PIN Ø4X30	N	0,37
27	BEARING 20X42X12 6004 2RS	N	4,20
28	PINION Z11 3/4 NEUTRAL	N	66,70
29	CHAIN JOIN	N	9,90
30	CHAIN JOIN	N	5,46

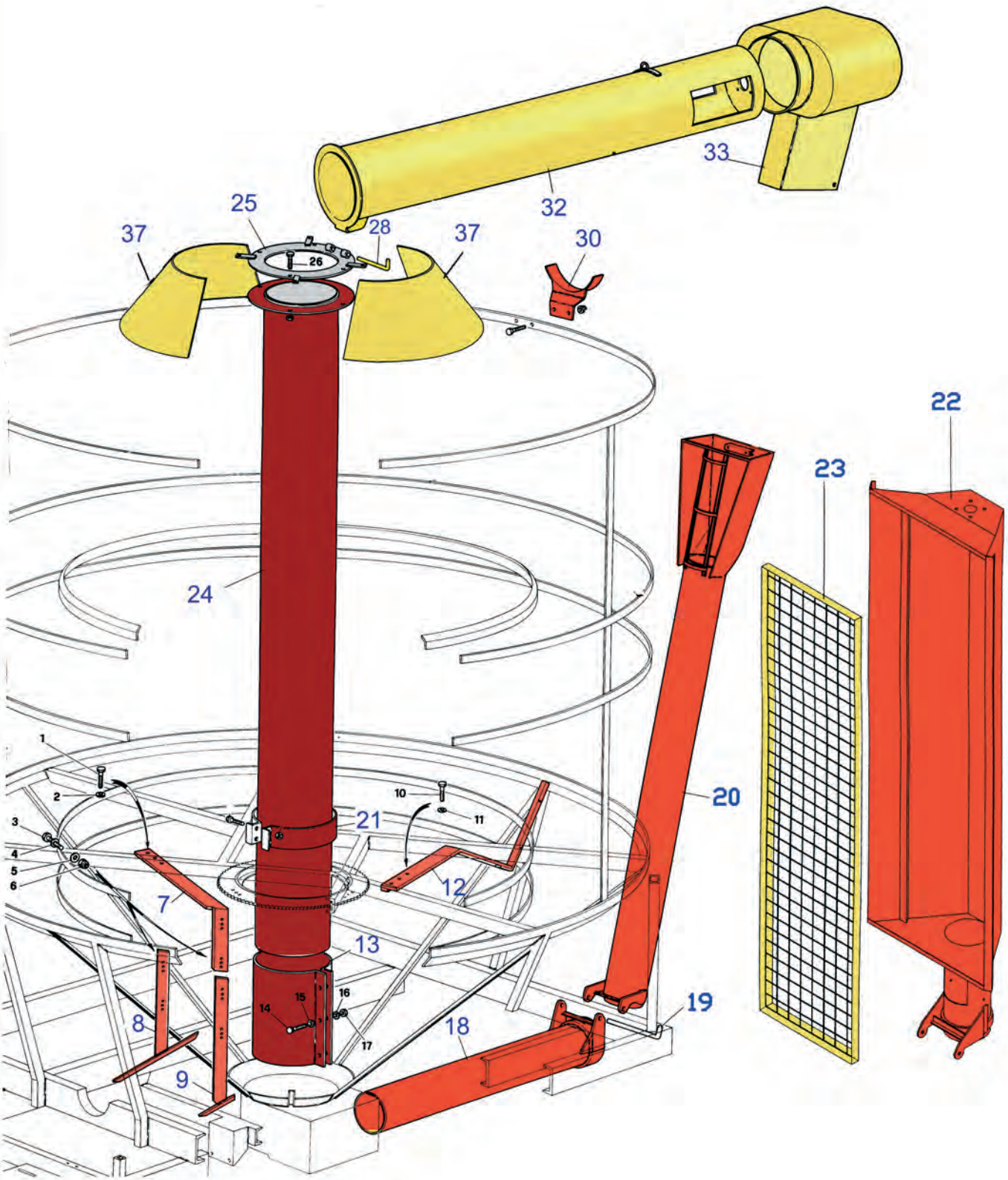

FP PEDROTTI ESSICCATOI

SPIRAL PIPE
AGITATORS - (for machines with inside chain only)

TAB. 5
2004

	SPIRAL PIPES	JUNIOR-SUPER	TAB. 5
	AGITATORS (For machines with inside chain only)	Sheet 1 of 1	2013

POS	DESCRIPTION	UM	Euro €
07	AGITATOR ARM	N	167,53
08	AGITATOR ARM	N	71,20
08A	AGITATOR ARM	N	167,53
09	AGITATOR ARM	N	78,69
12	AGITATOR ARM	N	189,09
12A	AGITATOR ARM	N	115,83
13	ADJUSTING BAND (*)	N	123,90
18	FIX PIPE Ø 200 (*)	N	223,04
19	FIXING PIN	N	21,24
20	TILTING PIPE Ø 200 C/W INTAKE HOPPER ("ITALIA" Type) (*)	N	556,88
21	PIPE LOCKING BAND	N	109,20
22A	TILTING PIPE Ø 200 C/W INTAKE HOPPER Ø 200 (*)	N	899,22
22B	TILTING PIPE Ø 200 C/W INTAKE HOPPER FOR CROSS BEARING Ø200 (*	N	946,17
23	TOP PROTECTION SCREEN ON INTAKE HOPPER	N	230,18
24	BOTTOM TUBE (see TAB 00 "TUBES FOR CENTRE AUGER")	N	1.231,98
25	HEAD BAND (*)	N	159,23
28	ANCHORAGE PIN	N	21,24
30	SUBSTAINING SUPPORT	N	81,26
32	TOP TUBE (see TAB 00 "TUBES FOR CENTRE AUGER")	N	
33	TOP HAT (see TAB 13)	N	
37	HALF TOP PLENUM CONIC SECTION	N	122,07
	*** (ITEM FOR MOD. "JUNIOR")**		
13	ADJUSTING BAND JUNIOR	N	112,74
18	FIX PIPE Ø 150	N	223,04
20	TILTING PIPE C/W INTAKE HOPPER Ø 150 ("ITALIA" Type)	N	443,29
22A	TILTING PIPE C/W INTAKE HOPPER Ø 150	N	899,22
22B	TILTING PIPE Ø 200 C/W INTAKE HOPPER FOR CROSS BEARING Ø150	N	946,17
25	HEAD BAND JUNIOR	N	159,23

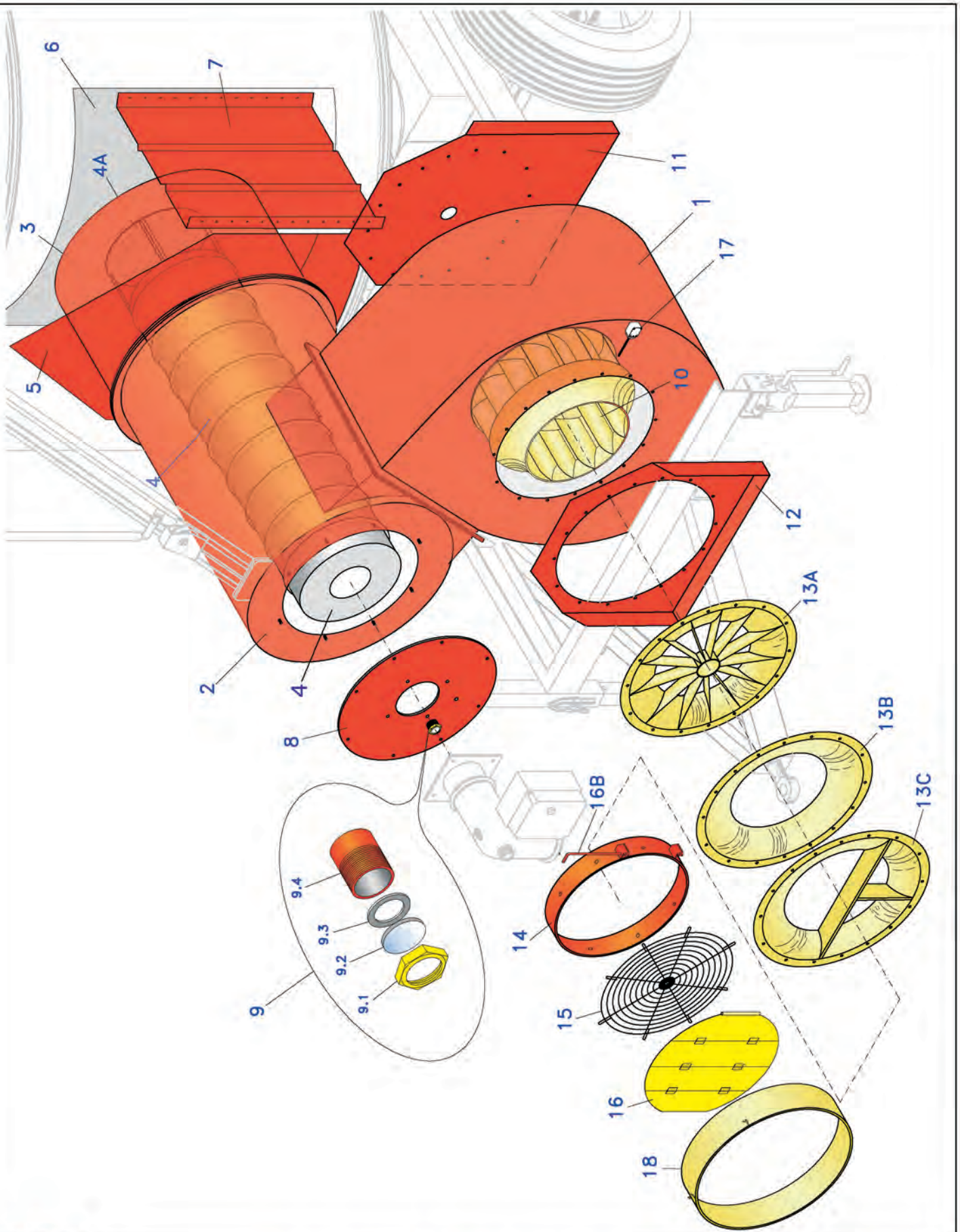

FP PEDROTTI ESSICCATOI

COMBUSTION CHAMBER
FAN UNIT

TAB 6
2004

	COMBUSTION CHAMBER FAN UNIT	JUNIOR-SUPER Sheet 1 of 1	TAB. 6 2013

POS	DESCRIPTION	UM	Euro €
1	FAN HOUSING (*)	N	825,15
2	OUTER PART OF COMBUSTION CHAMBER FUNNEL (*)	N	1.321,90
3	INLET PART OF COMBUSTION CHAMBER FUNNEL (*)	N	828,75
4	COMBUSTION CHAMBER	N	865,58
4A	COMBUSTION CHAMBER TERMINAL	N	99,78
5	OUTER PLATE OF COMBUSTION CHAMBER	N	114,76
6	INLET PLATE OF COMBUSTION CHAMBER	N	132,09
7	SIDE VERTICAL SHEET	N	99,02
8	FUNNEL FRONT COVER (*)	N	159,91
9	SPY HOLE	N	9,71
9.1	FIXING NUT Ø 1"1/4	N	2,93
9.2	GLASS	N	2,58
9.3	GASKET Ø 1"1/4	N	0,46
9.4	COUPING Ø 1" 1/4 L=50	N	3,75
10	FAN (*)	N	1.207,60
11	BACK SIDE GUARD (*)	N	353,58
12	FRONT SIDE GUARD (*)	N	312,02
13A	AIR CONVEYOR C/W DEFLECTORS	N	593,97
13B	AIR CONVEYOR WITHOUT DEFLECTORS (*)	N	228,08
13C	AIR CONVEYOR C/W BEARING SUPPORT FOR FAN SHAFT	N	373,35
14	CALENDED RING FOR FAN COVER	N	80,49
15	FAN GUARD (*)	N	151,73
16	FAN COVER beginning 1998	N	244,32
16A	FAN COVER until 1997	N	270,98
16B	PIN FAN COVER	N	7,01
17	FAN COVER SAFETY SWITCH	N	41,74
18	RING FOR "PEDROTTI" HEATING EXCHANGERS FIXING	N	77,84
	*** (ITEM FOR MOD. "JUNIOR")**		
1	FAN HOUSING JUNIOR	N	688,26
2	OUTER PART OF COMBUSTION CHAMBER FUNNEL JUN.	N	1.284,34
8	FUNNEL FRONT COVER JUNIOR	N	159,91
10	FAN JUNIOR	N	955,75
11	BACK SIDE GUARD JUNIOR	N	279,93
12	FRONT SIDE GUARD JUNIOR	N	252,03
13B	AIR CONVEYOR JUNIOR	N	212,31
13C	AIR CONVEYOR C/W BEARING SUPPORT FOR FAN SHAFT	N	357,58
15	FAN GUARD JUNIOR	N	147,93

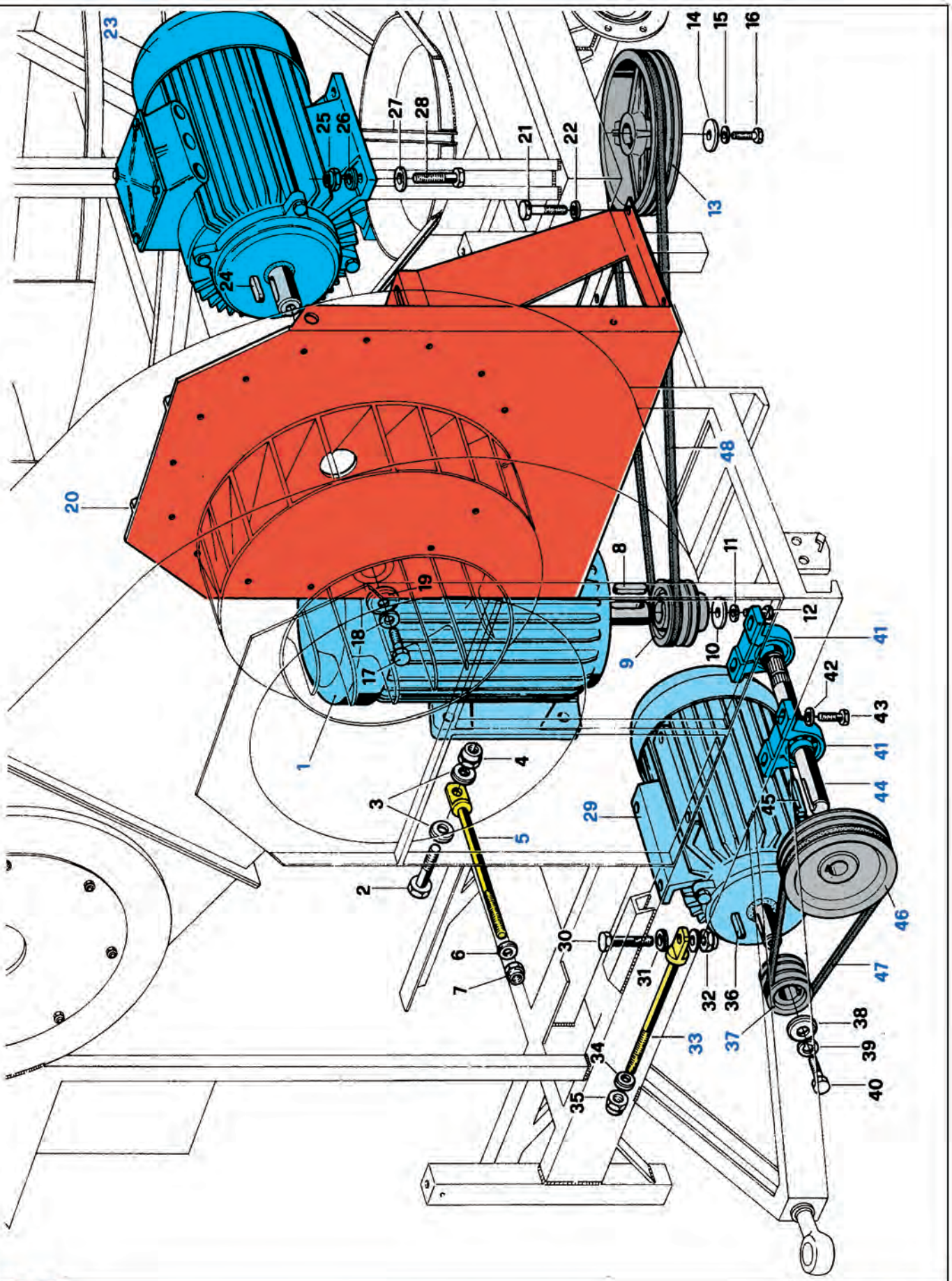

ESSICCATOI

ELECTRIC TRASMISSION

TAB 7
2004

	ELECTRIC TRANSMISSION	JUNIOR-SUPER	TAB. 7
		Sheet 1 of 1	2013

POS	DESCRIPTION	UM	Euro €
01	ELECTRIC MOTOR CENTRE AUGER 15 KW (HP 20) 1000 RPM (*)	N	2.774,00
05	TENSIONNER ROD	N	21,96
09	PULLEY B 112 4 RACES (*)	N	81,94
13A	PULLEY B 400 4 RACES FOR KEY (*)	N	301,82
13B	PULLEY B 400 4 RACES FOR VIBLOCK	N	295,49
20	BACK SIDE GUARD AND MOTOR STANDING SUPPORT	N	662,69
23	ELECTRIC MOTOR FAN 11 KW (HP 15) 1500 RPM (*) (**)	N	1.689,95
29	ELECTRIC MOTOR FILLING AUGER 5,5 KW (HP 7.5) 1500 RPM	N	890,60
33	TENSIONNER ROD	N	20,62
37	PULLEY A 90 3 RACES	N	55,77
41	BEARING UCP 207	N	29,54
44	SHAFT Ø 35 L=420	N	60,53
46	PULLEY A 250 3 RACES	N	112,88
47	BELTS AX 48 TOP QUALITY (**)	N	29,98
48	BELTS SPBX 2500 TOP QUALITY (*) (**)	N	79,12
	*** (ITEM FOR MOD. "JUNIOR")**		
01	ELECTRIC MOTOR CENTRE AUGER 11 KW (HP 15) 1000 RPM	N	2.149,85
09	PULLEY B 118 3 RACES	N	101,20
13	PULLEY B 400 3 RACES	N	295,98
20	BACK SIDE GUARD AND MOTOR STANDING SUPP. JUNIOR	N	584,70
23	ELECTRIC MOTOR FAN 7,5 KW (HP 10) 1500 RPM	N	1.062,15
29	ELECTRIC MOTOR FILLING AUGER 4 KW (HP 5.5) HP 1500 RPM	N	686,20
48	BELTS SPBX 2360 TOP QUALITY	N	73,29
	**** (ITEM FOR MOD. "SUPER 150")**		
23	ELECTRIC MOTOR FAN 15 KW (HP 20) 1500 RPM	N	2.774,00
47	BELTS AX42 TOP QUALITY	N	25,45
48	BELTS SPBX 2800 TOP QUALITY	N	86,08

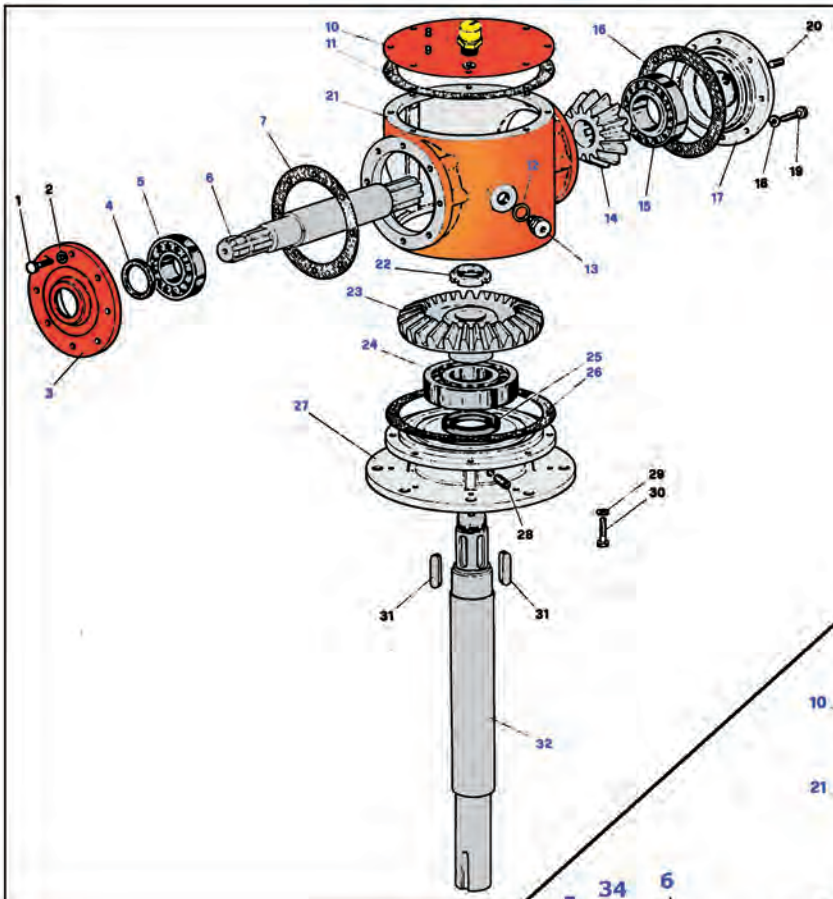

UNTIL 2007

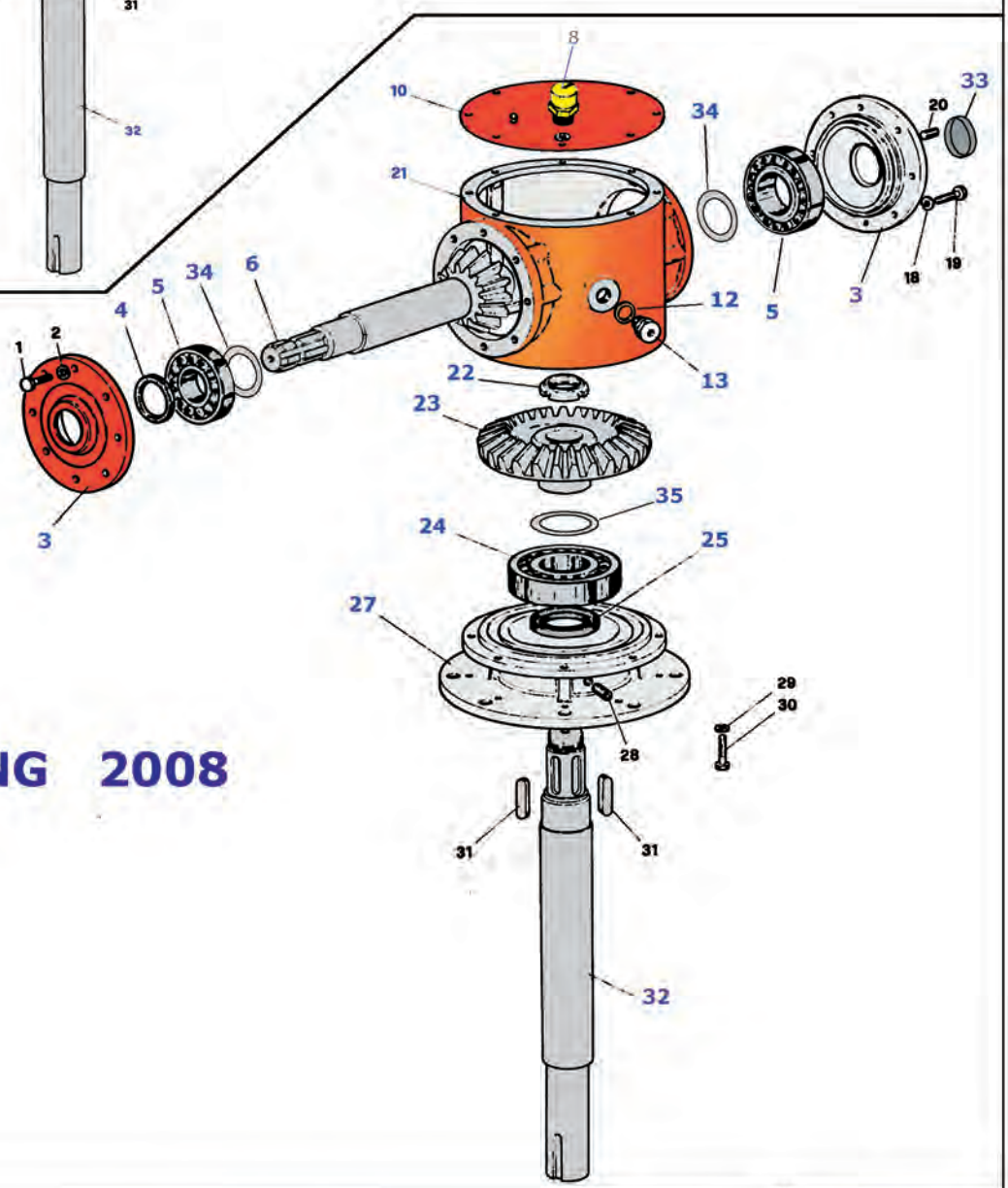

BEGINNING 2008

	GEARBOX	JUNIOR-SUPER	TAB. 8
		Sheet 1 of 1	2013

POS	DESCRIPTION	UM	Euro €
	UNTIL 2007	N	
3	FRONT COVER	N	84,49
4	SEAL 35x47x7	N	6,83
5	CONIC BEARING 35x72x18.5 - 30207	N	15,62
6	SPLINED SHAFT WITH PINION Z12 M6,5 (See BEGINNING 2008)	N	
7-11-16-26	OILPAPER GASKET	N	
8	DAIN PLUG Ø 3/8"	N	16,50
10	UPPER COVER	N	29,23
12	COPPER WASHER	N	0,70
13	CAP	N	1,27
14	BEVEL PINION (See BEGINNING 2008)	N	
15	CONIC BEARING 45x85x20.75 - 30209	N	21,27
17	REAR COVER (See BEGINNING 2008)	N	
21	EMPTY MAIN BODY	N	416,01
22	LOCKING RING 35x1.5 KM7	N	5,18
23	BEVEL GEAR Z 23 M 6,5	N	228,53
24	BEARING 55x120x29 - 6311	N	41,91
25	SEAL 55x80x10 (2 PCS.)	N	9,53
27	BOTTOM COVER	N	
32	VERTICAL SHAFT	N	248,33
	BEGINNING 2008		
3	COVER	N	84,49
4	SEAL 35x52x7	N	6,83
5	CONIC BEARING 35x72x24,5 - 32207	N	23,58
6	SPLINED SHAFT WITH PINION Z12 M6,5	N	484,21
8	DAIN PLUG Ø 3/8"	N	16,50
10	UPPER COVER	N	29,23
12	COPPER WASHER	N	0,70
13	CAP	N	1,27
21	EMPTY MAIN BODY	N	416,01
22	LOCKING RING 35x1.5 KM7	N	5,18
23	BEVEL GEAR Z 23 M 6,5	N	228,53
24	BEARING 55x120x29 - 6311	N	41,91
25	SEAL 55x80x10 (2 PCS.)	N	9,53
27	BOTTOM COVER	N	
32	VERTICAL SHAFT	N	248,33
33	PLUG Ø 52x7	N	5,51
34	SPACER Ø 35,3x48,0 mm	N	4,99
35	SPACER Ø 55,3x67,7 mm	N	7,48
A	GEARBOX COMPLETE	N	1.217,28

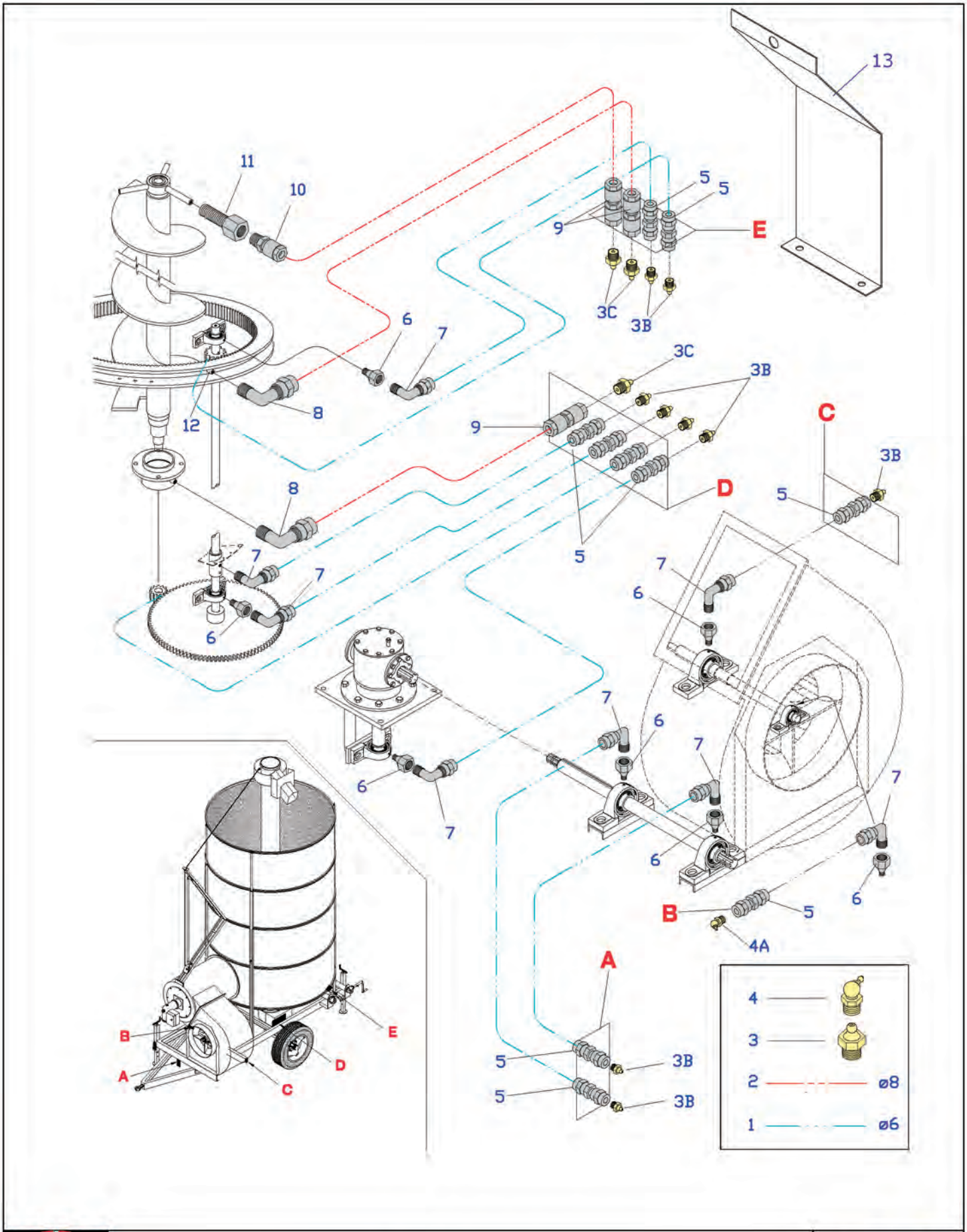

FP PEDROTTI ESSICCATOI

LUBRIFICATION SYSTEM

TA B 8A
2010

	LUBRIFICATION SYSTEM	JUNIOR-SUPER	TAB. 8A
		Sheet 1 of 1	2013

POS	DESCRIPTION	UM	Euro €
1	COPPER PIPE Ø 6	Kg	46,36
2	COPPER PIPE Ø 8	Kg	44,71
3A	GREASER M6	N	0,58
3B	GREASER M8	N	0,77
3C	GREASER M10	N	0,96
3D	GREASER 1/4"	N	1,40
4A	GREASER 45° M8	N	1,12
4B	GREASER 45* 1/4"	N	2,07
5	DOUBLE NIPPLE Ø 1/8" PIPE ø 6	N	3,45
6	ADAPTOR	N	4,80
7	CURVED NIPPLE Ø 1/8" PIPE ø 6	N	3,00
7A	HALF NIPPLE Ø 1/8" PIPE ø 6	N	2,25
8	CURVED NIPPLE Ø 1/4" ø 8	N	3,94
9	DOUBLE NIPPLE 1/4" ø 8	N	4,33
10	HALF NIPPLE Ø 1/4" PIPE ø 8	N	3,00
11	BOLT M12X35 / FEMALE NIPPLE ¼	N	7,45
12	COUPLING 1/4" L = 25	N	1,01
13	GREASER PROTECTION	N	28,69
D	GREASER PLATE	N	15,61
E	GREASER PLATE	N	13,88

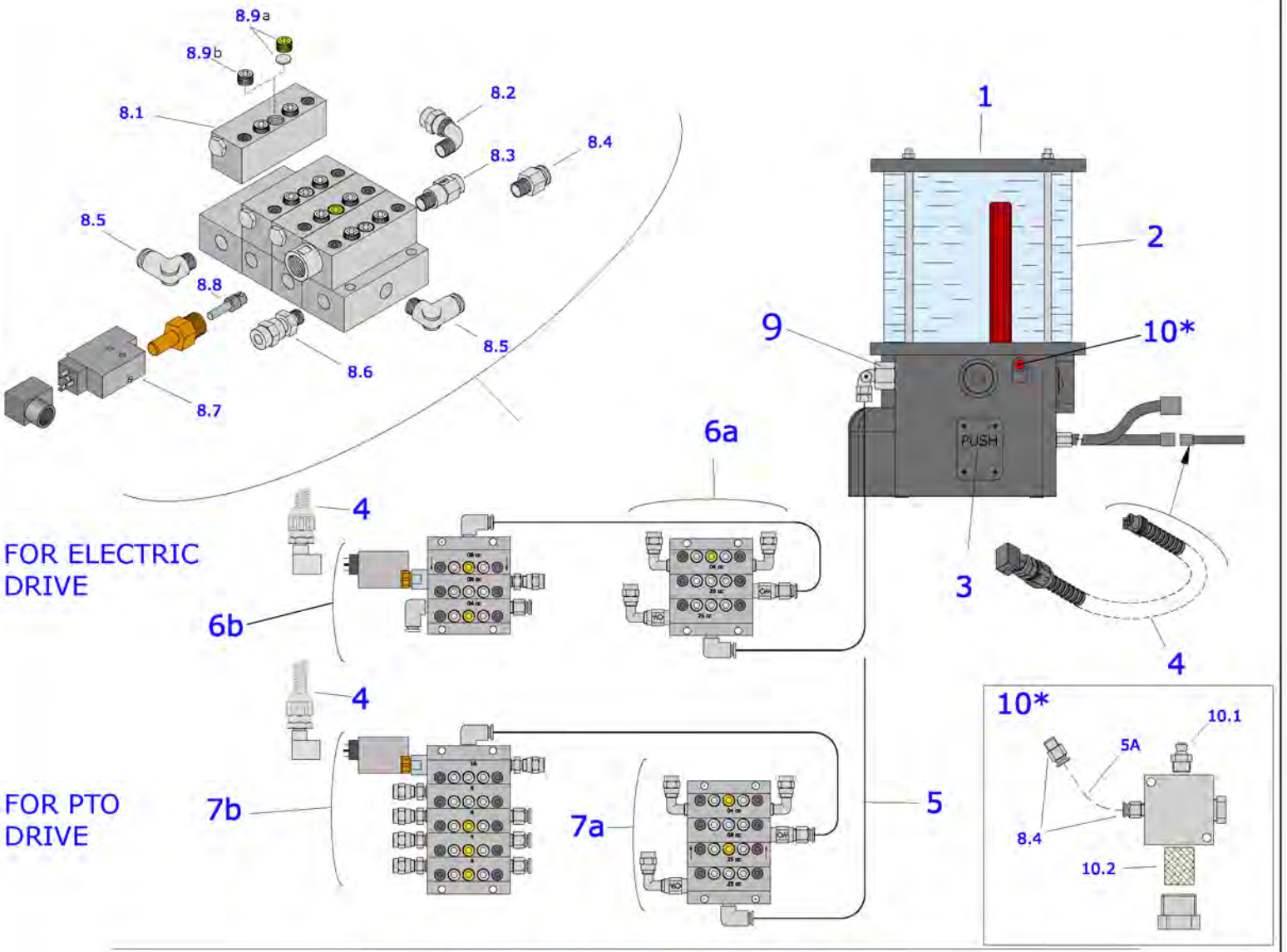

ELECTRIC COMPONENTS INSIDE PANEL
FOR POWER SUPPLY PUMP

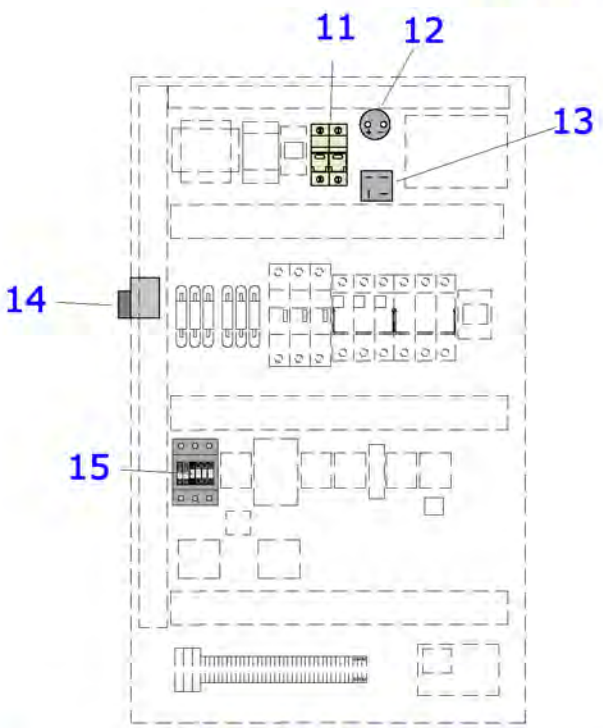

ELECTRIC DRIVE

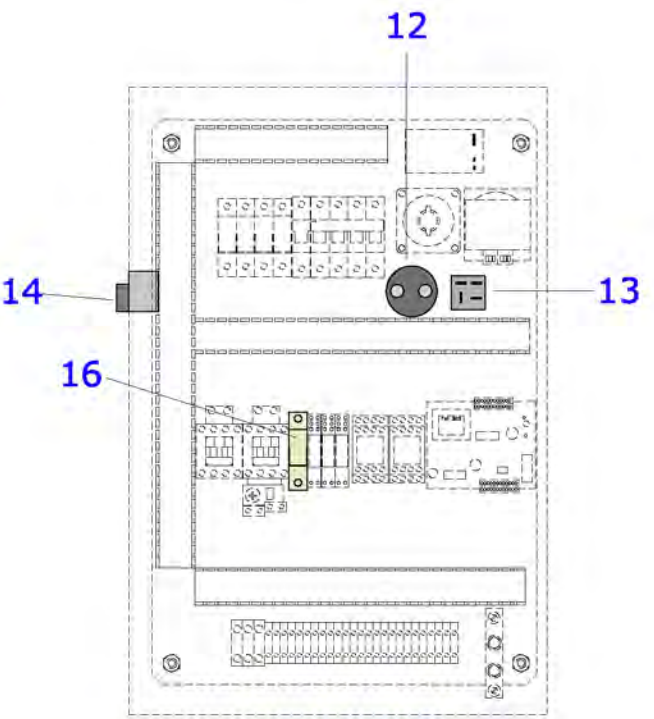

PTO DRIVE

FP PEDROTTI ESSICCATOI

AUTOMATIC AND PERMANENT LUBRICATION SYSTEM

TAB. 8B
2006

	AUTOMATIC LUBRICATION SYSTEM	JUNIOR-SUPER	TAB. 8B
		Sheet 1 of 1	2013

POS	DESCRIPTION	UM	Euro €
1	ELECTRIC GREASE PUMP 24 V 4 Kg WITH TIMER	N	1.782,11
2	GREASE TRANSPARENT RESERVOIR FOR ELECTRIC PUMP	N	179,43
3	PLUG-IN CARD	N	268,14
4	CONNECTION CABLE FOR MAGNETIC SENSOR	N	62,68
5A	NYLON PIPE Ø 6x3	m	4,06
5B	COPPER PIPE Ø 6	kg	46,36
6A	1° BLOCK OF DISTRIBUTORS C/W CONNECTORS FOR ELECTRIC DRIVE	N	263,51
6B	2° BLOCK OF DISTRIBUTORS C/W CONNECTORS FOR ELECTRIC DRIVE	N	424,31
7A	1° BLOCK OF DISTRIBUTORS C/W CONNECTORS FOR PTO DRIVE	N	339,35
7B	2° BLOCK OF DISTRIBUTORS C/W CONNECTORS FOR PTO DRIVE	N	573,01
8.1	DISTRIBUTOR COMPLETE	N	47,37
8.2	CONNECTOR 1/8" 90° FOR COPPER TUBE Ø 6	N	3,00
8.3	CHECK VALVE Ø 1/8" M-F	N	9,57
8.4	CONNECTOR 1/8" STRAIGHT FOR NYLON PIPE FAST CONNECTION	N	3,64
8.5	CONNECTOR 1/8" 90° FOR NYLON PIPE FAST CONNECTION	N	5,75
8.6	CONNECTOR 1/8" STRAIGHT FOR COPPER PIPE	N	2,25
8.7	MAGNETIC CONTACT	N	137,97
8.8	MAGNET	N	
8.9a	YELLOW ZINC-PLATED DOWEL 1/8" x 8 WITH SEAL DISK	N	1,00
8.9b	WHITE ZINC-PLATED DOWEL 1/8" x 8	N	1,00
9	PUMPING ELEMENT	N	174,24
10	INLET FILTER GROUP	N	
10,1	GREASER 1/8"	N	
10,2	CATRIDGE FILTER	N	
11	BIPOLAR FUSE CARRIER 10x38	N	15,73
11A	FUSE 10x38 4A	N	2,23
12	CONDENSER 10.000 µf 63 V	N	60,83
13	BRIDGE RECTIFIER	N	23,96
14	GREEN PILOT LIGHT	N	10,88
15	AUXILIARY CONTACT	N	4,91
16	UNIPOLAR FUSE CARRIER 10x38	N	5,63
16A	FUSE 10x38 6A	N	2,23

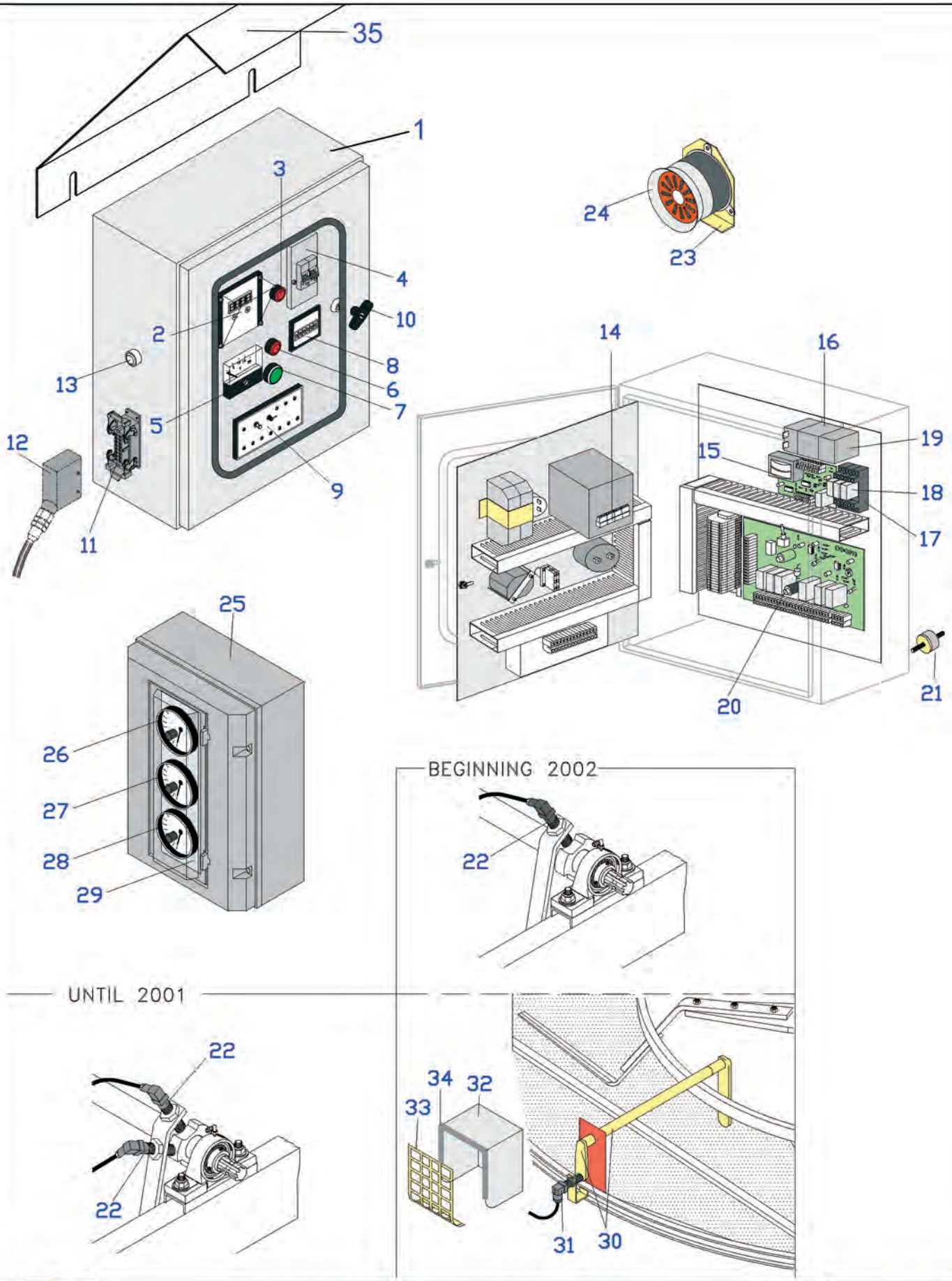

ELECTRIC PANEL 12V
THERMOSTATS-ELECTRICAL ITEM

TA B 9
2010

FP PEDROTTI ESSICCATOI

	12V ELECTRIC PANEL - THERMOSTATS ELECTRICAL ITEMS - REVS SENSORS	JUNIOR-SUPER Sheet 1 of 1	TAB. 9 2013

POS	DESCRIPTION	UM	Euro €
1	CONTROL PANEL EMPTY BOX	N	633,87
2	REVS COUNTER HOLDING BOX	N	148,74
3	WAITING LIGHT FOR NEW IGNITION	N	12,06
4	GENERAL SWITCH	N	31,97
5	VOLTMETER	N	100,39
6	ALTERNATOR LIGHT	N	12,06
7	BURNER START BUTTON	N	20,74
8	HOURMETER	N	125,85
9	BURNER DIAGNOSTIC PANEL	N	242,73
10	LOCK	N	49,09
11	MULTIPLUG 16 POINTS CONNECTOR BURNER FIX	N	42,92
12	MULTIPLUG 16 POINTS CONNECTOR BURNER MOBILE	N	41,44
13	DLC RED LIGHT	N	36,61
14	REVS COUNTER P/C BOARD EMI 386 C	N	284,59
15	ROTATION CONTROL P/C BOARD EMI 393	N	245,70
16	SUPPORT BATTERY	N	18,36
17	SWITCH DLC SOKET	N	11,33
18	SWITCH FOR DLC	N	15,00
19	ANCILLARY BATTERY	N	41,35
19A	DIODE ON BATTERY	N	27,24
20	MAIN P/C BOARD EMI 389 B	N	258,06
21A	RUBBER MOUNTING M6	N	4,25
21B	RUBBER MOUNTING M10	N	11,17
22	REVS SENSOR	N	101,38
23	ACOUSTIC ALARM SUPPORT	N	6,75
24	ACOUSTIC ALARM	N	194,88
25	PROTECTION BOX	N	44,90
26	AIR THEMOSTAT 200°C	N	195,71
27	SAFETY THERMOSTAT 200°C	N	195,71
28	CEREAL THERMOSTAT 120°C	N	203,60
28A	CEREAL THERMOSTAT 80°C	N	197,10
29	ALLUMINIUM PLATE PROTECTION BOX	N	13,69
30	MECCHANICAL KIT FOR DLC	N	268,43
31	SENSOR OF DLC	N	136,45
31A	SWITCH OF DLC (BEGINNING 2008)	N	41,74
32	DLC PROTECTION	N	70,10
33	DLC GUARD	N	16,79
34	SHEATH PROTECTION	m	9,67
35	TOP COVER FOR ELECTRIC PANEL	N	183,75
50	ELECTRIC PANEL FULLY ASSEMBLED	N	4.151,79
	12V ELECTRIC PANEL WITH PLC SEE TAB 9 E		

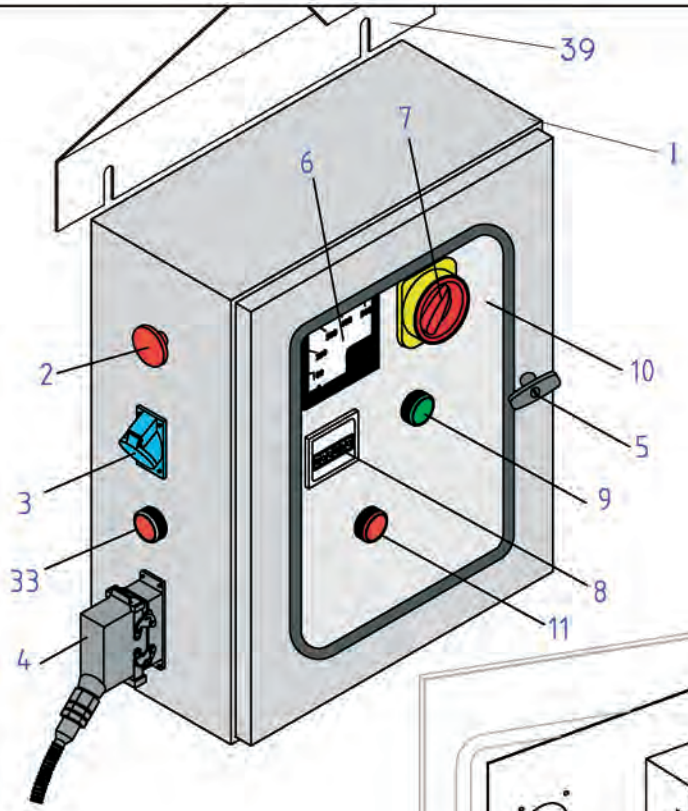

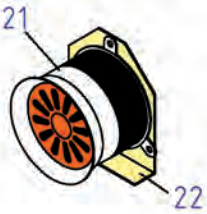

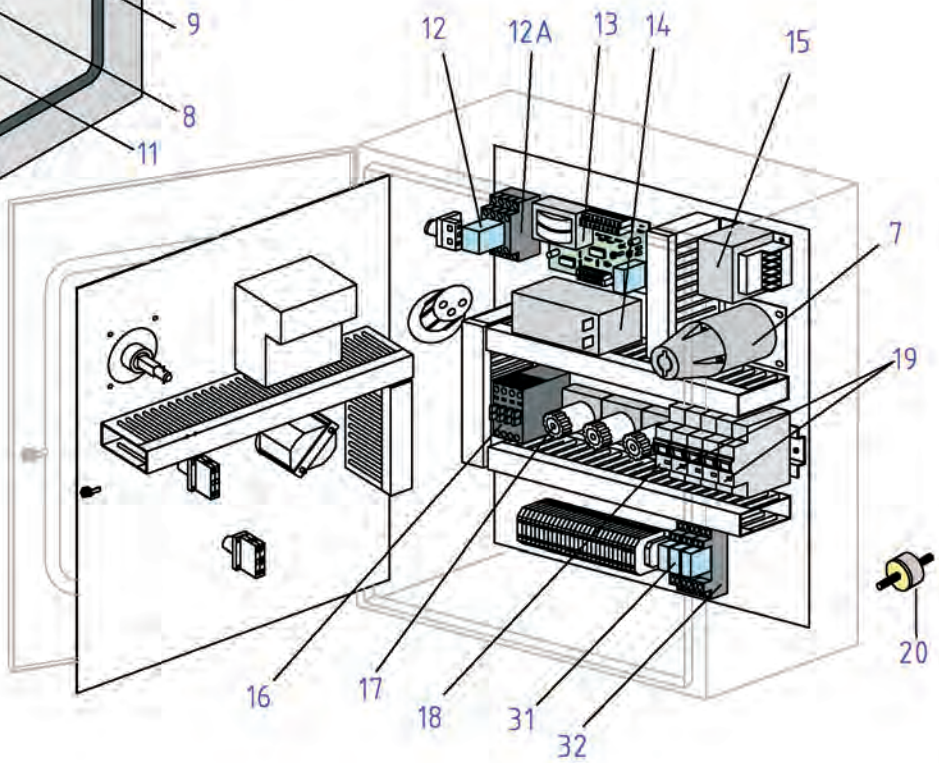

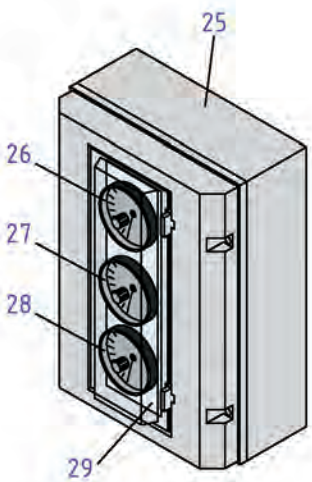

— UNTIL 2001

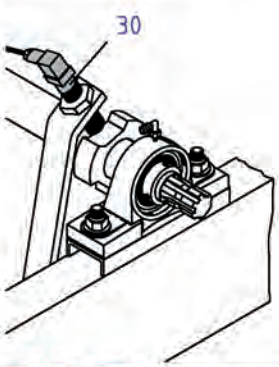

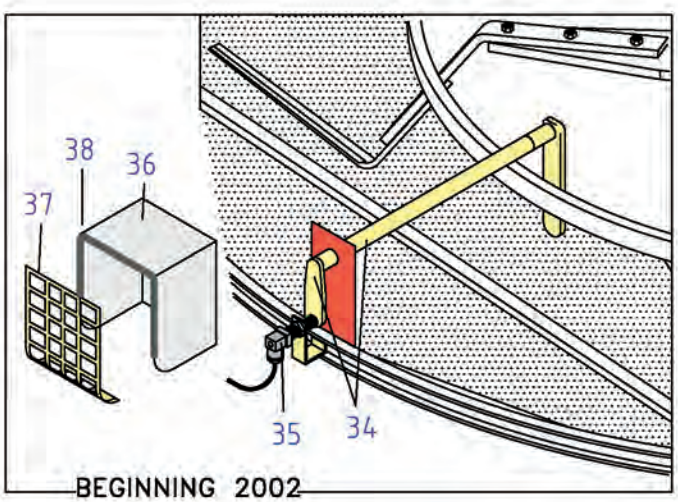

BEGINNING 2002

	GENERATOR ELECTRIC PANEL THERMOSTATS - ELECTRICAL ITEMS	JUNIOR-SUPER Sheet 1 of 1	TAB. 9A 2013

POS	DESCRIPTION	UM	Euro €
1	CONTROL PANEL EMPTY BOX	N	633,87
2	EMERGENCY STOP BUTTON	N	20,93
3	SINGLE PHASE 220 VOLTS SOCKET	N	10,14
4A	MULTIPLUG 10 POINTS CONNECTOR BURNER TO PANE FEMALE	N	34,82
4B	MULTIPLUG 10 POINTS CONNECTOR BURNER TO PANE MALE	N	27,05
5	LOCK	N	49,09
6	VOLTMETER 500V	N	86,39
7	LOCKING-DOOR SWITCH	N	103,43
8	HOUR METER	N	52,60
9	GREEN BUTTON	N	20,74
10	FRONT DOOR	N	94,02
11	RED BUTTON	N	20,74
12A	MEMORY RELAY MY2K	N	91,74
12B	MEMORY RELAY MY2K SOKET	N	11,20
13	ROTATION CONTROL P/C BOARD EMI 393	N	245,70
14	ANCILLARY BATTERY 12V	N	41,35
15	TRANSFORMER	N	66,80
16	CONTACTOR SCO3/T (COIL 24V)	N	48,22
17A	FUSES HOLDER	N	11,09
17B	FUSES 10 A	N	1,06
17C	FUSES 4 A	N	1,06
18	COIL 24 V	N	35,04
19	AUTHOMATIC SWITCH 4X10A	N	71,83
20A	RUBBER MOUNTING M6	N	4,25
20B	RUBBER MOUNTING M10	N	11,17
21	ACOUSTIC ALARM	N	194,88
22	ACOUSTIC ALARM SUPPORT	N	6,75
25	PROTECTION BOX	N	44,90
26	AIR THEMOSTAT 200°C	N	195,71
27	SAFETY THERMOSTAT 200°C	N	195,71
28	CEREAL THERMOSTAT 120°C	N	203,60
28A	CEREAL THERMOSTAT 80°C	N	197,10
29	ALLUMINIUM PLATE PROTECTION BOX	N	13,69
30	ROTATION SENSOR (until 2001)	N	101,38
31	SWITCH FOR DLC	N	15,00
32	SWITCH DLC SOKET	N	11,33
33	DLC RED LIGHT	N	36,61
34	MECCHANICAL KIT FOR DLC	N	268,43
35	SENSOR OF DLC	N	136,45
35A	SWITCH OF DLC (BEGINNING 2008)	N	41,74
36	DLC PROTECTION	N	70,10
37	DLC GUARD	N	16,79
38	SHEATH PROTECTION	m	9,67
39	TOP COVER FOR ELECTRIC PANEL	N	183,75
50	CONTROL PANEL FULLY ASSEMBLED	N	3.476,03
	GENERATOR ELECTRIC PANEL WITH PLC SEE TAB 9 D		

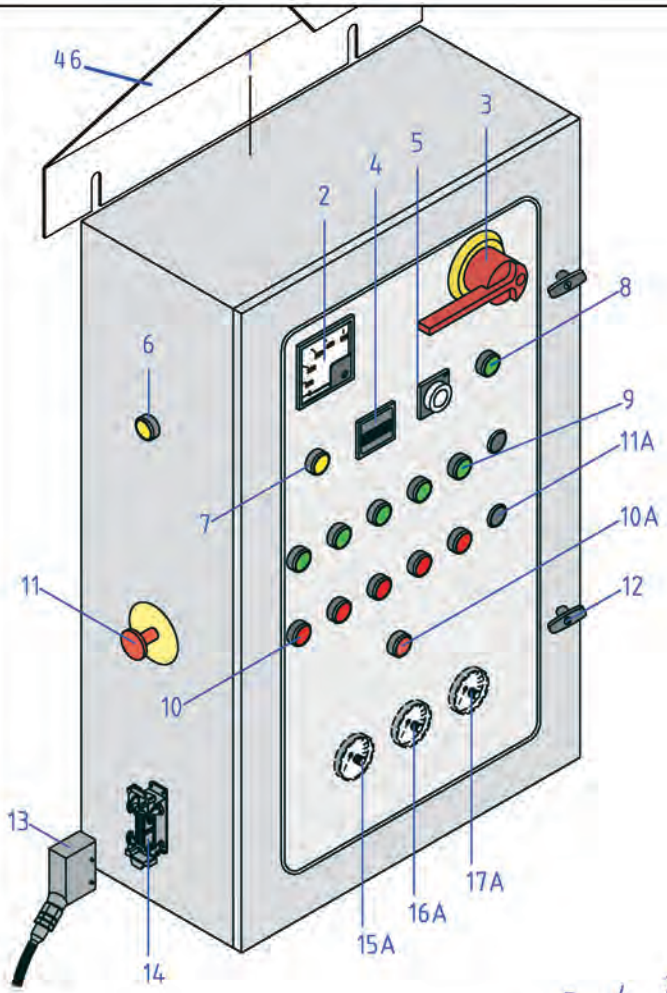
46
1
3
5
4
2
8
6
9
11A
7
10A
11
12
10
13
17A
16A
15A
14

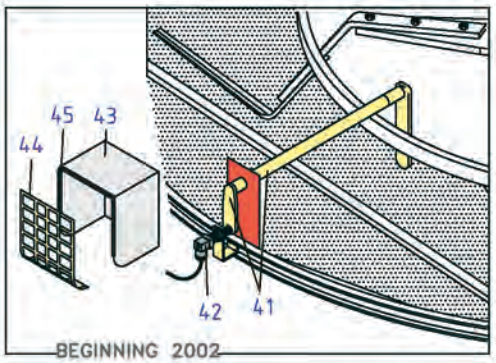
45
43
44
42
41
BEGINNING 2002

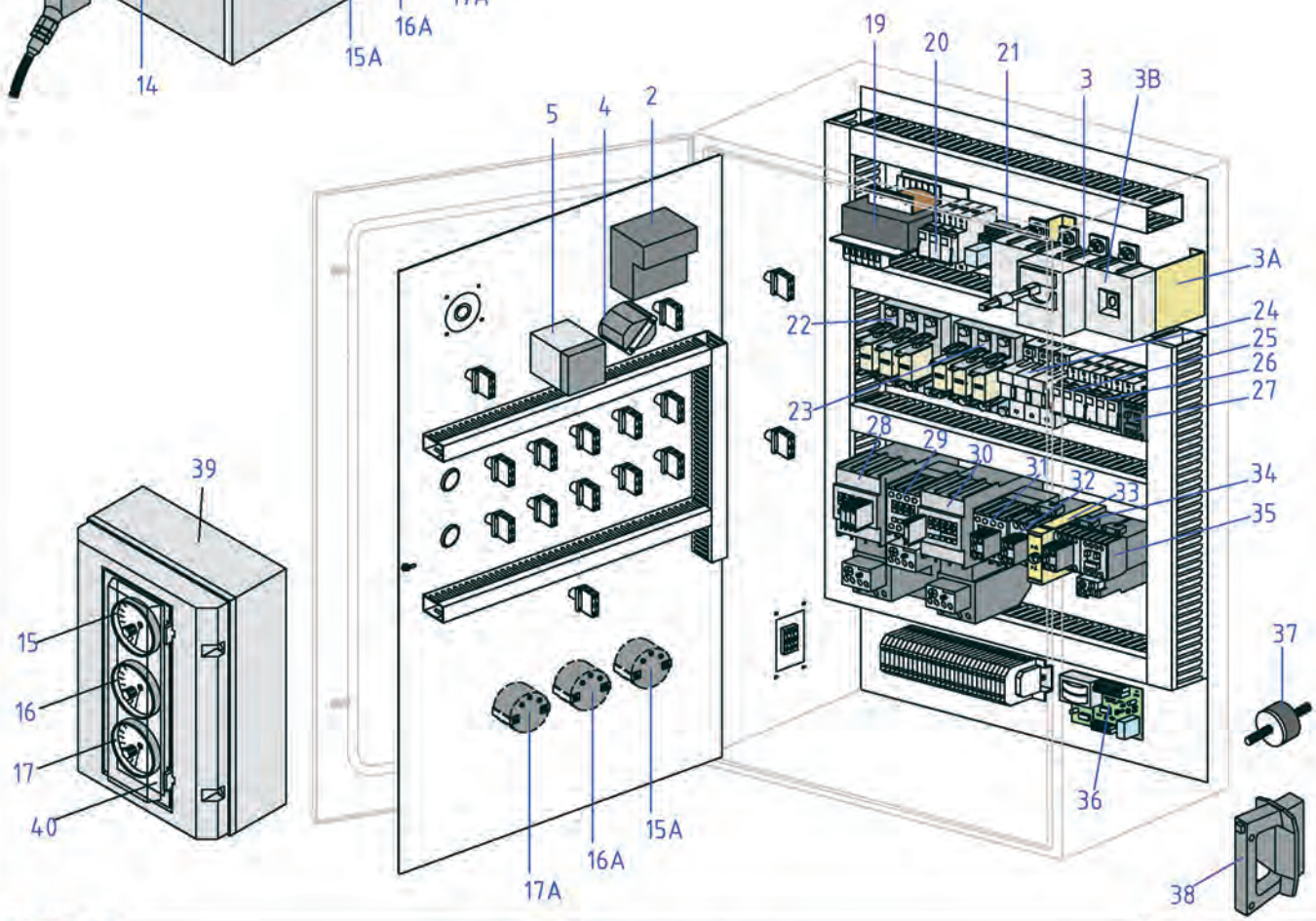
19
20
21
3
3B
5
4
2
3A
22
24
25
26
23
27
28
29
30
31
32
33
34
35
39
37
15
16
17
40
36
38
17A
16A
15A

	ELECTRIC PANELS ELECTRIC MODEL	JUNIOR-SUPER Sheet 1 of 2	TAB. 9B 2013

POS	DESCRIPTION	UM	Euro €
1	ELECTRIC PANEL EMPTY BOX SUPER (*)		1.092,90
2	AMPEROMETER 100/5A 500A (*)	N	91,25
2A	AMPEROMETER TRANSFORMER (*)	N	46,21
3	HANDLE ON/OFF GENERAL SWITCH 4x160A (*)	N	259,95
3A	GENERAL SWITCH SUPPORT	N	11,32
3B	PLEXIGLAS SWITCH PROTECTING (*)	N	63,33
4	HOURMETER 24 V	N	52,60
5	COOLING TIMER T45	N	136,51
6	DLC RED LIGHT	N	36,61
7	JELLOW LIGHT "THERMAL OFF"	N	10,88
8	GREEN LIGHT "TENSION ON"	N	10,88
9	GREEN LIGHT BUTTONS	N	14,11
10	RED BUTTONS	N	10,70
10A	RED LIGHT BUTTONS	N	17,95
11	EMERGENCY STOP BUTTON (On outer side panel from 1997)	N	20,93
11A	PLASTIC PLUG	N	6,35
12	LOCK	N	49,09
13	MULTIPOINTS SOCKET 10P	N	27,05
14	MULTIPOINTS PLUG FROM BURNER TO PANEL 10P	N	34,82
15	AIR THEMOSTAT 200°C	N	195,71
15A	AIR THEMOSTAT 200°C LONG PROBE	N	333,61
16	SAFETY THERMOSTAT 200°C	N	195,71
16A	SAFETY THERMOSTAT 200°C LONG PROBE	N	333,61
17	CEREAL THERMOSTAT 120°C	N	203,60
17.1	CEREAL THERMOSTAT 80°C	N	197,10
17A	CEREAL THERMOSTAT 120°C LONG PROBE	N	370,11
17A.1	CEREAL THERMOSTAT 80°C LONG PROBE	N	286,89
19	TRANSFORMER 250 VA (*)	N	118,92
20	BOX FOR FUSES 10X38	N	19,03
20A	FUSES 10X38 4A AM	N	2,23
20B	FUSES 10X38 10A AM	N	2,27
21	MEMORY RELAY MY2K	N	91,74
21A	MEMORY RELAY MY2K SOKET	N	11,20
22-23	SUPPORT FOR FUSES NH00 (*)	N	63,36
22A	FUSES FAN MOTOR NH00 63A (*)	N	15,56
23A	FUSES MOTOR CENTRE AUGER NH00 100A (*)	N	15,56
24	BOX FOR FUSES 14X51	N	50,37
24A	FUSES MOTOR FILLING AUGER 14x51 40A AM (*)	N	3,81
25-26	BOX FOR FUSES 10X38	N	19,03
25A-26A	FUSES 10X38 10A AM	N	2,27
27	RELAY AUXILIARY SH 4/T	N	26,85
28	CONTACTOR FOR MOTOR CENTRE AUGER SCP08 (*)	N	262,95
28A	THERMAL RELAY FOR ABOVE SRT2 (*)	N	80,43
28B	CONTACTOR AUXILIARY SBCF 10 (*)	N	4,91
29	CONTACTOR FOR MOTOR FILLING AUGER SCP04 24V (*)	N	95,28
29A	THERMAL RELAY FOR ABOVE SRT1 (*)	N	70,91
29B	CONTACTOR AUXILIARY SBCF 10	N	4,91
30	CONTACTORS FOR FAN MOTOR SCP06 24V (*)	N	153,06
30A	THERMAL RELAY SRT2 D (*)	N	80,43
30B	CONTACTOR AUXILIARY SBCF 10	N	4,91

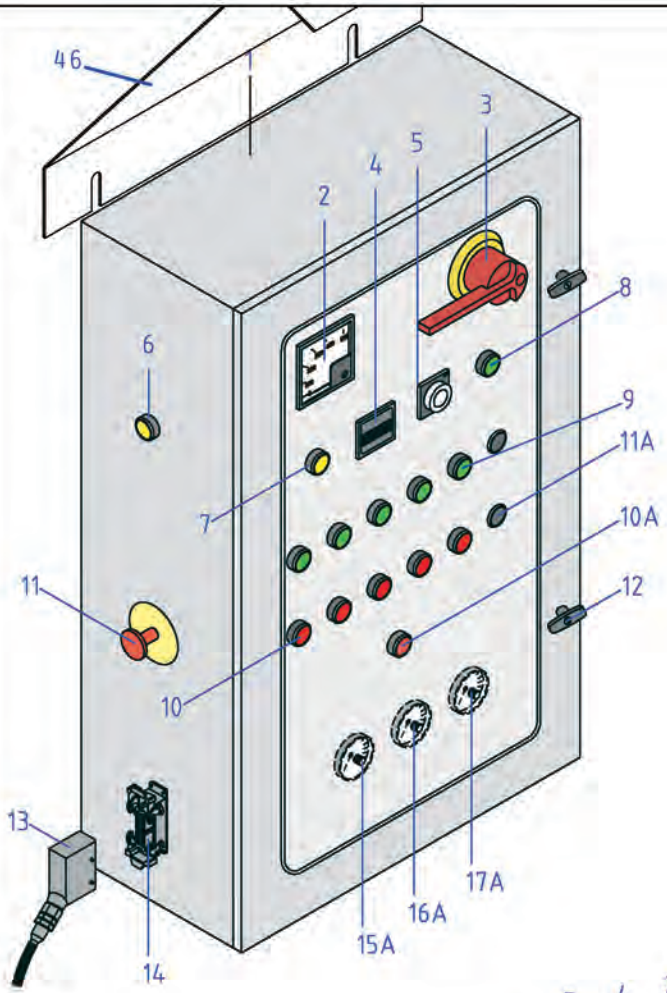
46
1
3
5
4
2
8
6
9
11A
7
10A
11
12
10
13
17A
16A
15A
14

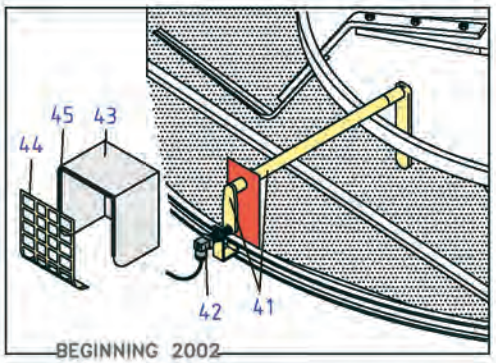
45
43
44
42
41
BEGINNING 2002

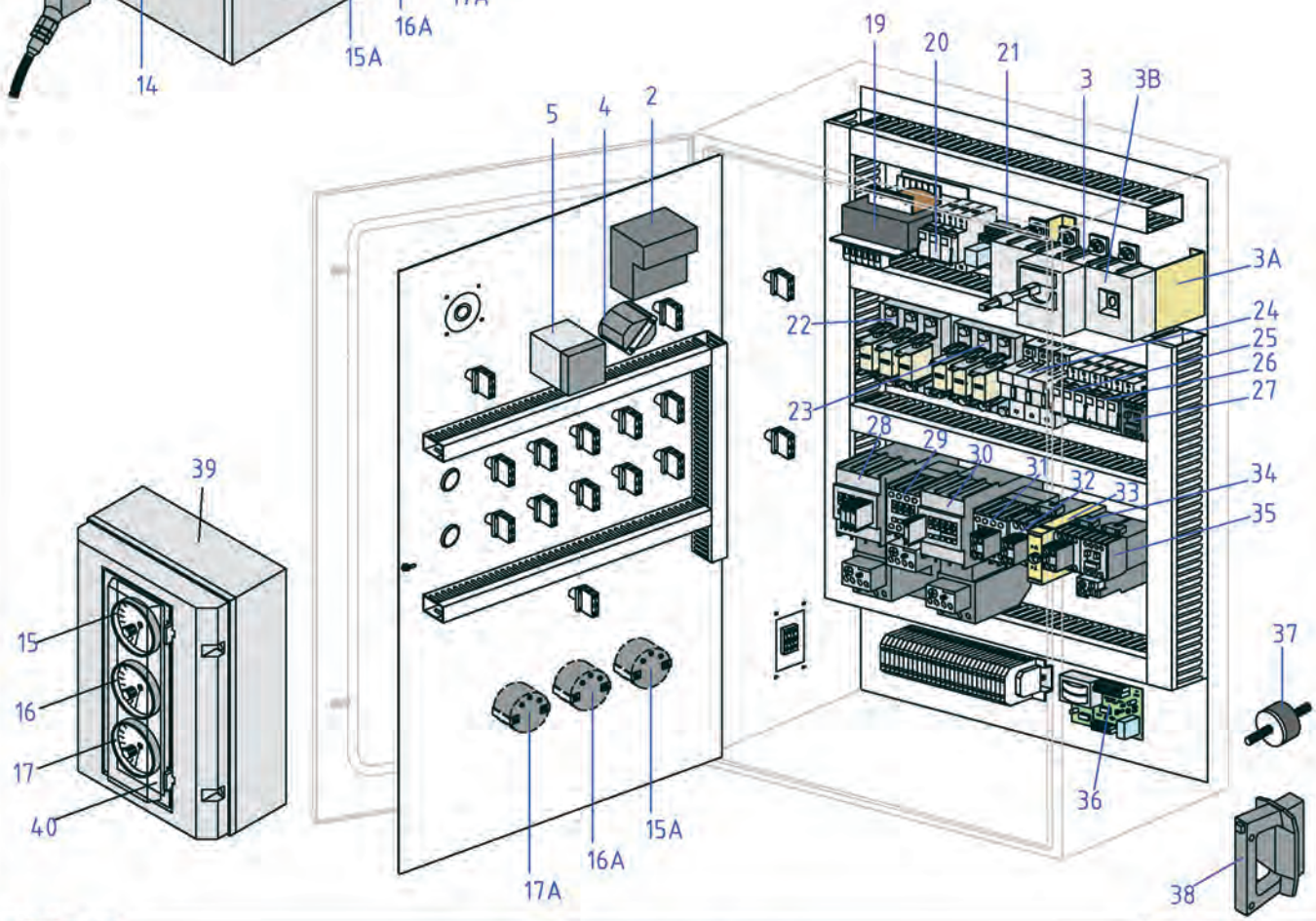
19
20
21
3
3B
5
4
2
3A
22
24
25
26
23
27
28
29
30
31
32
33
34
35
39
37
15
16
17
40
36
38
17A
16A
15A

	ELECTRIC PANELS ELECTRIC MODEL	JUNIOR-SUPER Sheet 2 of 2	TAB. 9B 2013

POS	DESCRIPTION	UM	Euro €
31	CONTACTORS FOR FAN MOTOR SCP04 24V (*)	N	95,28
31B	CONTACTOR AUXILIARY SBCF 01 (*)	N	4,91
31C	CONTACTOR AUXILIARY SBCF 10	N	4,91
32	CONTACTORS FOR FAN MOTOR SC-4-1/T 24V (*)	N	59,40
32B	CONTACTOR AUXILIARY SZ-A11/T	N	14,27
33	TIMER DELTA/STAR FOR FAN MOTOR FIBER E 21	N	101,48
34	CONTACTORS BURNER MOTOR SC-03/T 24V	N	29,90
34B	CONTACTOR AUXILIARY SZ-A11/T	N	14,27
35	CONTACTOR MOTOR DUST EXTRACTOR SC-0/T 24V	N	35,18
35A	THERMAL RELAY FOR DUST EXTR. E TKON/T	N	47,81
36	ROTATION CONTROL P/C BOARD EMI 393	N	245,70
37	RUBBER MOUNTING M10	N	11,17
38	HANDLE FOR FUSE NH00	N	26,15
39	PROTECTION BOX	N	44,90
40	ALLUMINIUM PLATE PROTECTION BOX	N	13,69
41	MECCHANICAL KIT FOR DLC	N	268,43
42	SENSOR OF DLC	N	136,45
42A	SWITCH OF DLC (BEGINNING 2008)	N	41,74
43	DLC PROTECTION	N	70,10
44	DLC GUARD	N	16,79
45	SHEATH PROTECTION	m	9,67
46	TOP COVER FOR ELECTRIC PANEL	N	183,75
50	DIGITAL VOLTMETER	N	185,90
60	ELECTRIC PANEL FULLY ASSEMBLED SUPER (*)	N	6.563,63
	* (ITEM FOR MOD. "JUNIOR")		
1	ELECTRIC PANEL EMPTY BOX JUNIOR	N	682,97
2	AMPEROMETER 60/5 300A	N	91,25
3	MAIN SWITCH ON/OFF 4x100A	N	229,29
3B	PLEXIGLAS SWITCH 4x100A PROTECTING	N	33,58
19	TRANSFORMER 160 VA	N	104,10
22-23	BOX FOR FUSES 14X51	N	50,37
22A-23A	FUSES 14x51	N	3,81
24A	FUSES MOTOR FILLING AUGER 10x38 16A	N	2,27
28	CONTACTOR FOR MOTOR CENTRE AUGER SCP04	N	95,28
28A	THERMAL RELAY FOR ABOVE SRT1	N	70,91
28B	AUXILIARY CONTACTOR SBCF 10	N	4,91
29	CONTACTOR FOR MOTOR FILLING AUGER SC-4-1/T	N	59,40
29A	THERMAL RELAY FOR ABOVE TK 5-1N/T	N	47,59
30	CONTACTORS FOR FAN MOTOR SC-4-1/T (2 Pz)	N	59,40
30A	THERMAL RELAY FOR SC-4-1/T: TK 5-1N/T	N	47,59
31	CONTACTORS FOR FAN MOTOR SC-0/T	N	35,18
31B	AUXILIARY CONTACTOR FOR FAN MOTOR SZ-A22	N	16,72
60	ELECTRIC PANEL FULLY ASSEMBLED JUNIOR	N	5.188,16
	ELECTRIC PANEL WITH PLC SEE TAB 9 C		

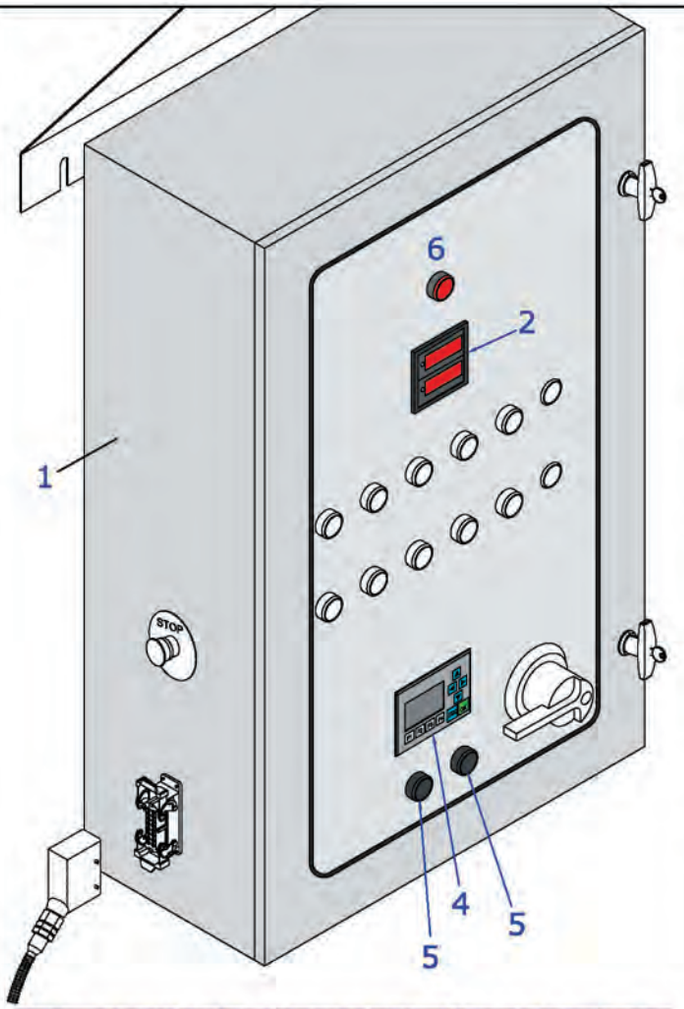

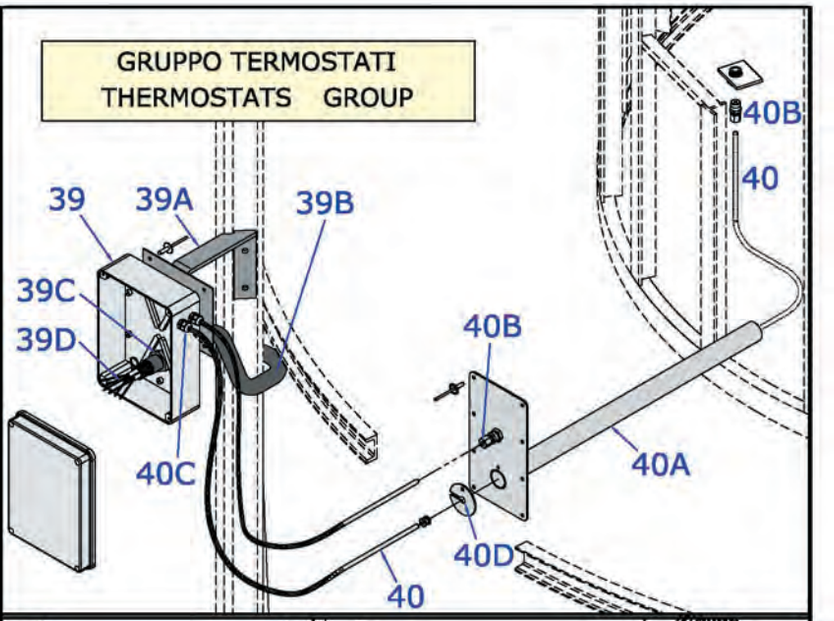

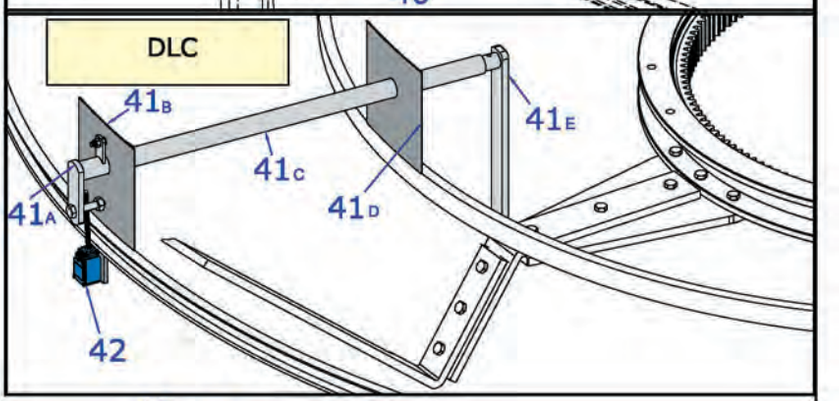

PER I PARTICOLARI NON IDENTIFICATI VEDI TAV. 9B
FOR DETAILS UNIDENTIFIED SEE TAB 9B

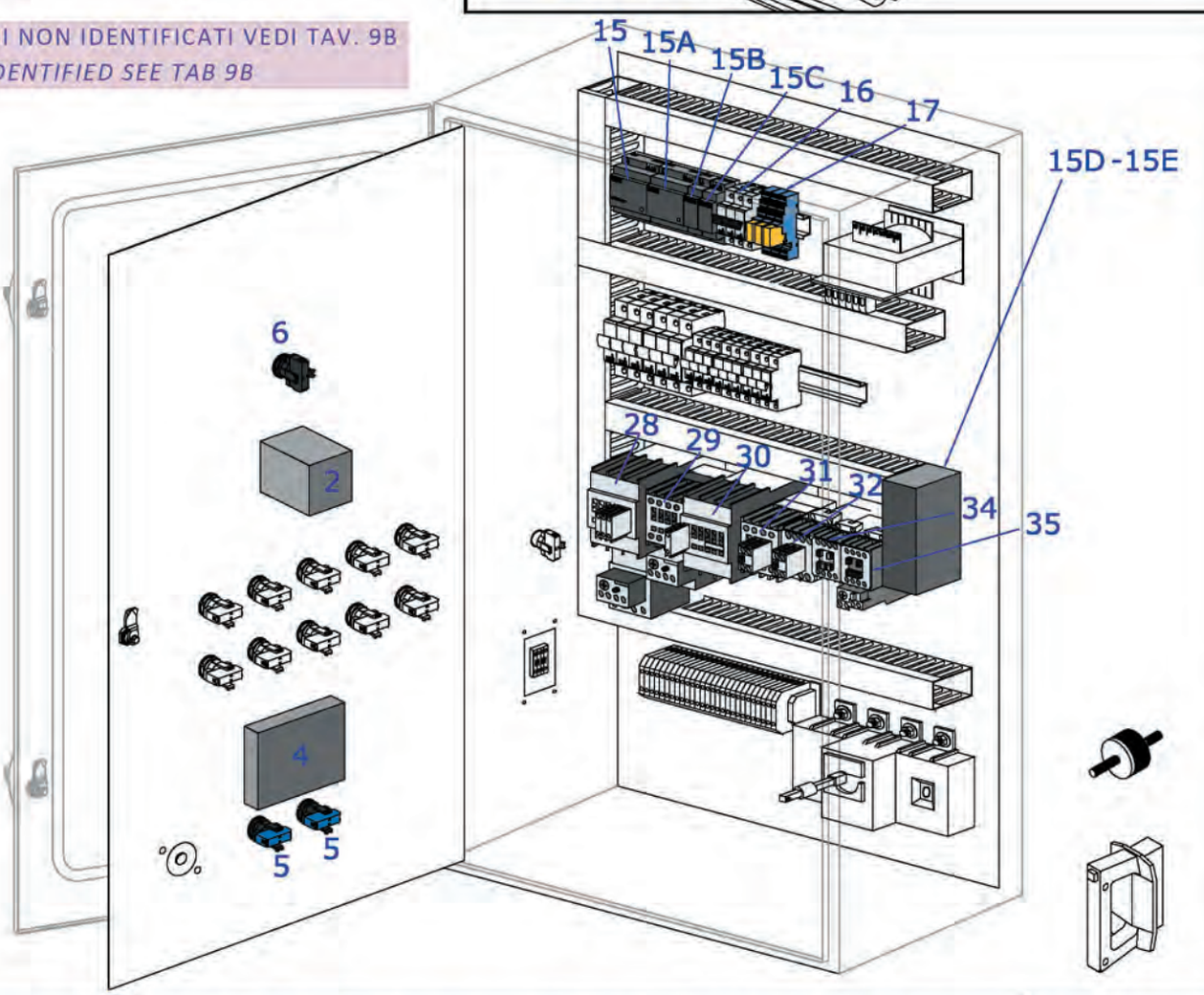

FP PEDROTTI ESSICCATOI

PLC ELECTRIC PANELS" ELECTRIC MODEL" THERMOSTATS - DLC SYSTEM

TAB.9C
2013

	PLC ELECTRIC PANELS - " ELECTRIC MODEL" - THERMOSTATS - DLC	JUNIOR-SUPER	TAB. 9C
		Sheet 1 of 2	2013

POS	DESCRIPTION	UM	Euro €
1	ELECTRIC PANEL EMPTY BOX SUPER 224 B (*)	N	1.095,00
2	MULTIMETER	N	257,33
4	LOGO! TD DISPLAY	N	355,88
5	BLACK BUTTON	N	10,70
6	RED LIGHT	N	10,91
15	LOGO! LOGIC MODULE AC/DC	N	278,13
15A	LOGO! DM16 24R DIGITAL EXPANSION	N	278,86
15B	LOGO! DM8 24R DIGITAL EXPANSION	N	174,47
15C	LOGO! AM2 RTD ANALOGIC EXPANSION (PT100)	N	253,31
15D	LOGO! POWER FEEDER 2,5 A	N	114,61
15E	LOGO! POWER SUPPLY FEEDER 4A	N	126,66
16	BOX FOR FUSES 10X38	N	19,03
16A	FUSES 10X38	N	2,27
17	BASE FOR RELAY FINDER 95.75	N	11,11
17A	DOUBLE EXCHANGE RELAY 230VAC	N	20,08
17B	DOUBLE RELAY EXCHANGE 24 VAC	N	12,59
28	CONTACTOR FOR MOTOR CENTRE AUGER 24 VAC (*)	N	274,02
28A	THERMAL RELAY FOR ABOVE TKE3 34/50 A (*)	N	77,98
28B	CONTACTOR AUXILIARY SZ A40 /T (*)	N	16,61
29	CONTACTOR FOR MOTOR FILLING AUGER SCE2 24VAC (*)	N	128,88
29A	THERMAL RELAY FOR ABOVE TKE2 12/18 (*)	N	59,80
30	CONTACTORS FOR FAN LINE SCE2 24VAC (*)	N	128,88
30A	THERMAL RELAY TKE2 18/26 A (*)	N	59,80
30B	CONTACTOR AUXILIARY SZ-A11/T	N	14,27
31	CONTACTORS FOR FAN DELTA STARTING SCE2 24VAC (*)	N	128,88
31B	CONTACTOR AUXILIARY SZ A11/T (*)	N	14,27
32	CONTACTORS FOR FAN STAR STARTING SC4-1/T 24VAC (*)	N	59,40
32B	CONTACTOR AUXILIARY SZ-A11/T	N	14,27
34	CONTACTORS BURNER MOTOR SC-03/T 24V	N	29,90
35	CONTACTOR MOTOR DUST EXTRACTOR SC-0/T 24V	N	35,18
35A	THERMAL RELAY FOR DUST EXTR. E TKON/T 4-6A	N	47,81
		N	
39	JUNCTION BOX 190X140X70	N	16,94
39A	JUNCTION BOX SUPPORT	N	39,79
39B	FLEXIBLE HOSES L15N	N	5,42
39C	CONNECTOR CMMF 15 Pg16 WITH PLUG	N	8,70
39D	SCRENNED CABLE 3X1	m	1,83
40	PT100 PROBE WITH STEEL CABLE	N	129,21
40A	SUPPORT TUBE FOR PROBES GAUGES	N	90,72
40B	STRAIGHT PIPE CONNECTOR 1/4" Ø 6	N	3,29
40C	FAIRLEAD PG7	N	1,70
40D	WIRE WASHER	N	4,83
41	MECCHANICAL KIT FOR DLC (A+B+C+D+E)	N	268,43
42	SWITCH OF DLC FC 325	N	41,74

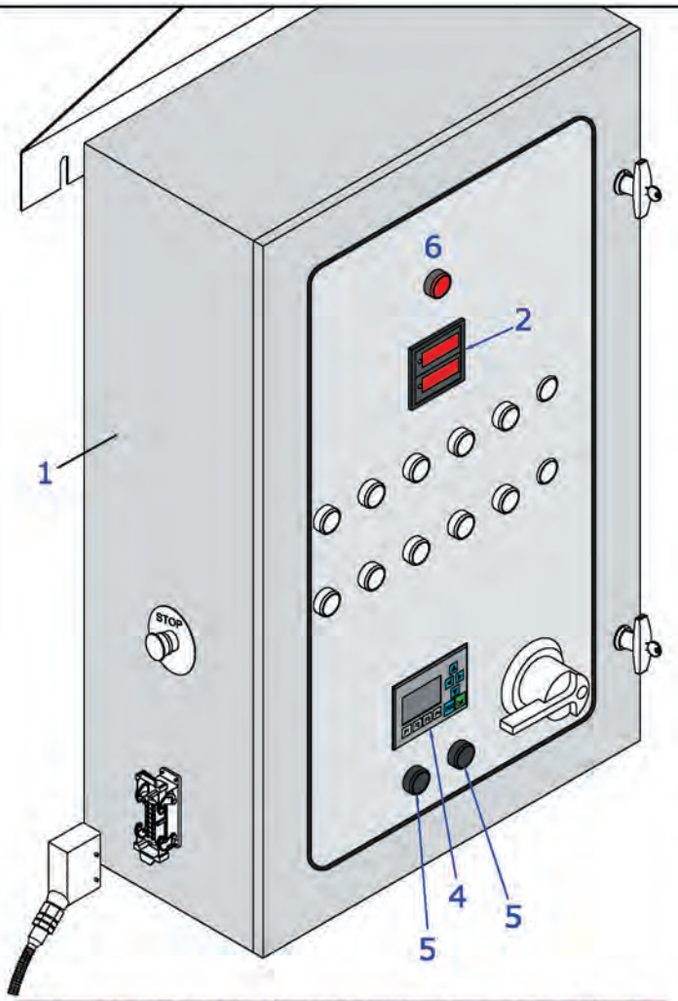

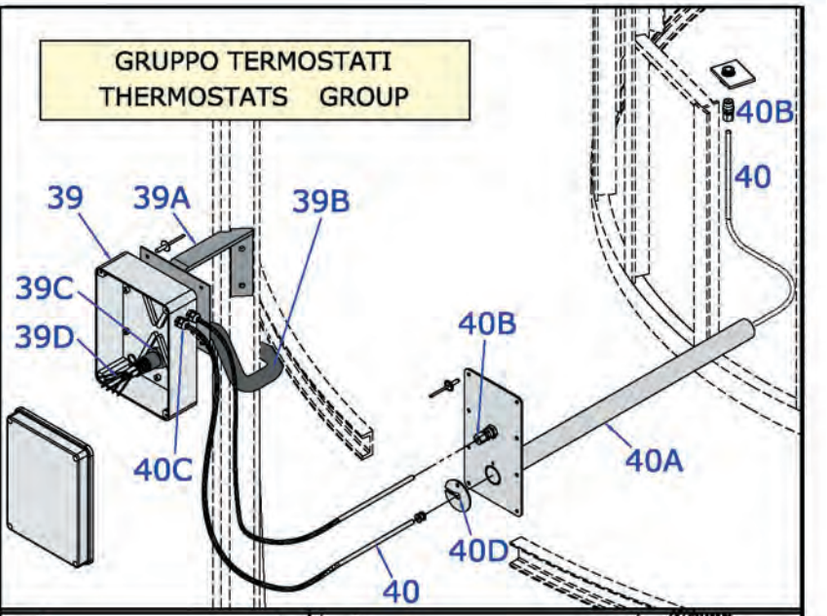

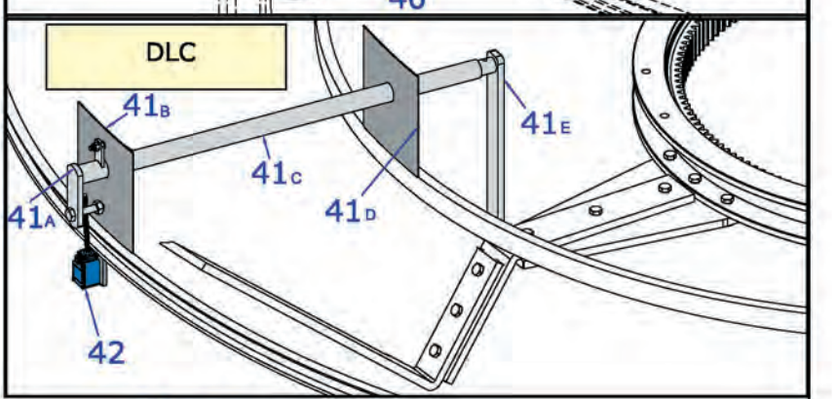

PER I PARTICOLARI NON IDENTIFICATI VEDI TAV. 9B
FOR DETAILS UNIDENTIFIED SEE TAB 9B

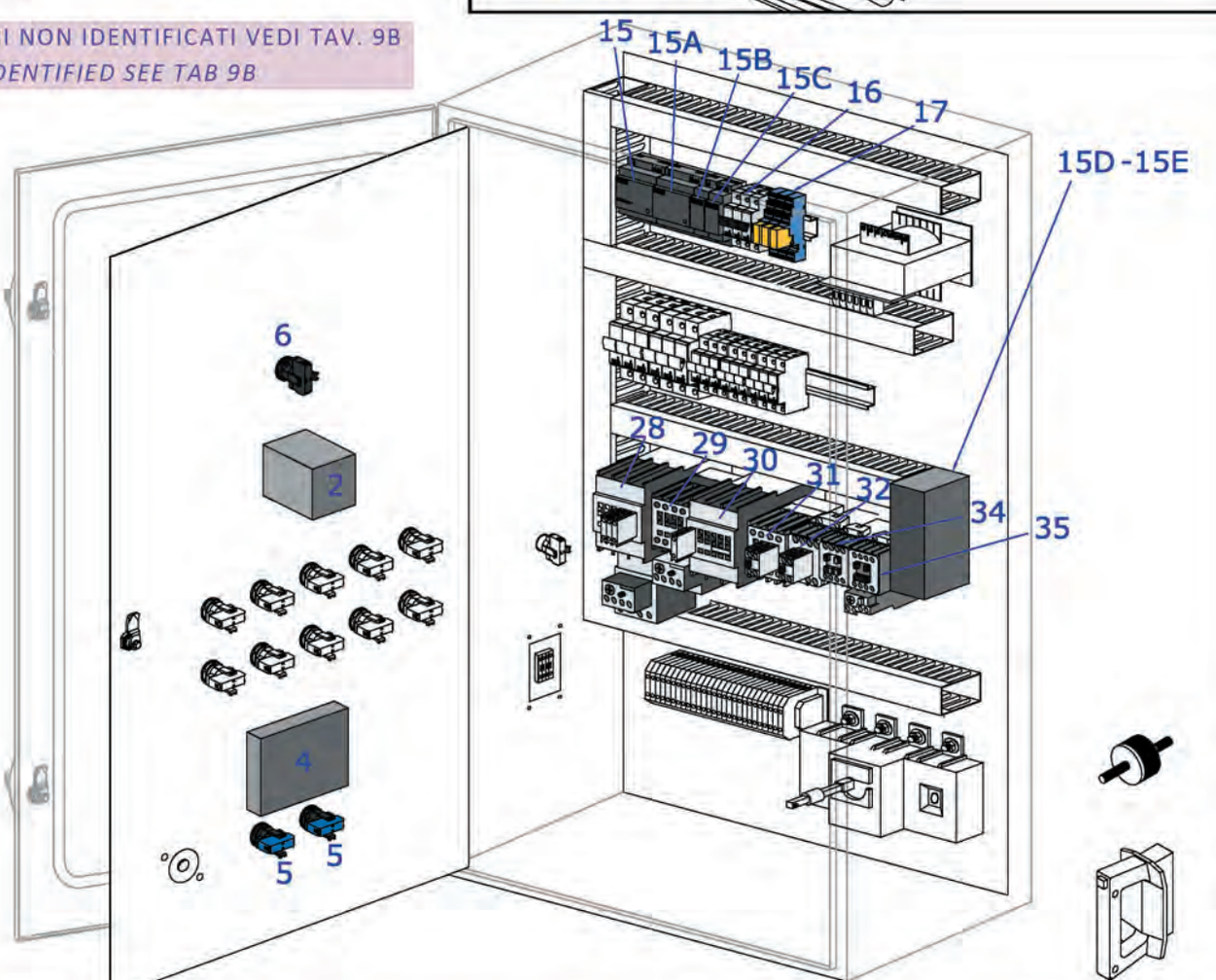

	PLC ELECTRIC PANELS - " ELECTRIC MODEL" - THERMOSTATS - DLC	JUNIOR-SUPER	TAB. 9C
		Sheet 2 of 2	2013

POS	DESCRIPTION	UM	Euro €
	*** (ITEM FOR MOD. "JUNIOR")**		
1	ELECTRIC PANEL EMPTY BOX 222 B	N	1.092,90
28	CONTACTOR FOR MOTOR CENTRE AUGER SCE2S VAC	N	149,93
28A	THERMAL RELAY FOR ABOVE TKE 3 18/26 A	N	59,80
29	CONTACTOR FOR MOTOR FILLING AUGER SC-4-1/T VAC	N	59,40
29A	THERMAL RELAY FOR ABOVE TK51N 9/13	N	47,94
30	CONTACTORS FOR FAN LINE SC-4-1/T 24vac	N	59,40
30A	THERMAL RELAY TK ON 9/13	N	47,81
31	CONTACTORS FOR FAN DELTA STARTING SC-4-1/T 24vac	N	59,40
32	CONTACTORS FOR FAN STAR STARTING SC0/T 24VAC	N	35,18

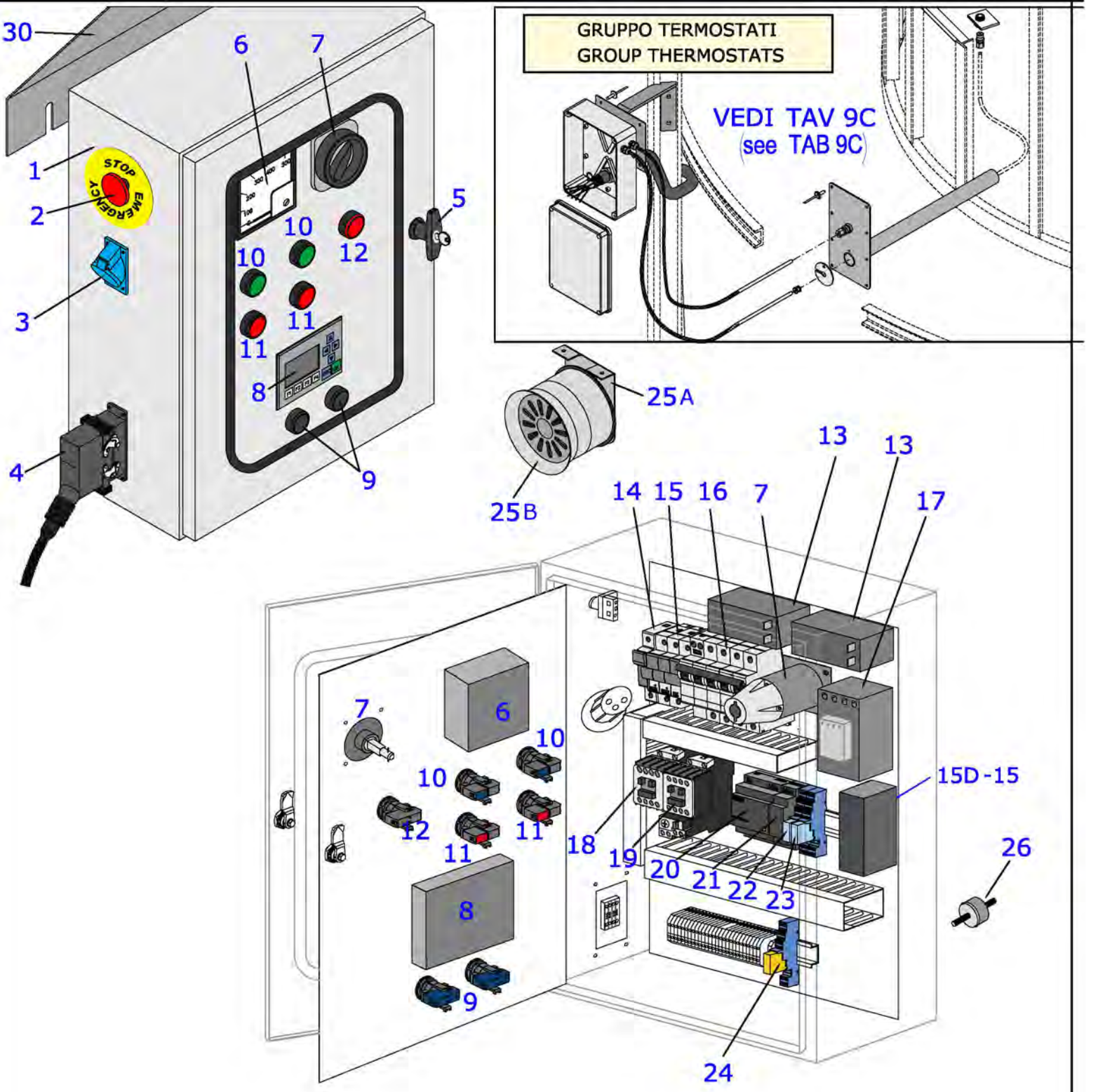

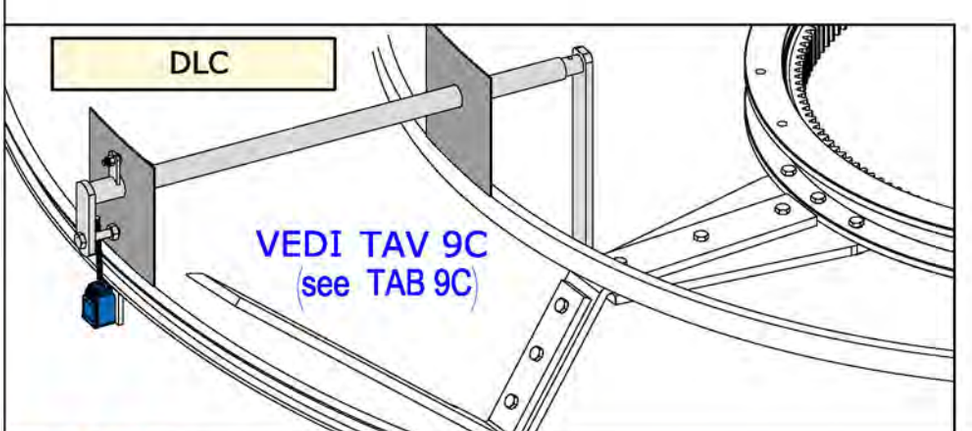

FP PEDROTTI ESSICCATOI

PLC ELECTRIC PANEL "GENERATOR MODEL"

TAB. 9D
2013

	PLC ELECTRIC PANEL "GENERATOR MODEL" - THERMOSTATS - DLC	JUNIOR-SUPER	TAB. 9D
		Sheet 1 of 1	2013

POS	DESCRIPTION	UM	Euro €
1	CONTROL PANEL EMPTY BOX (214B)	N	485,32
2	EMERGENCY STOP BUTTON	N	20,93
3	SINGLE PHASE 220 VOLTS SOCKET	N	10,14
4A	MULTIPLUG 10 POINTS CONNECTOR BURNER TO PANE FEMALE	N	34,82
4B	MULTIPLUG 10 POINTS CONNECTOR BURNER TO PANE MALE	N	27,05
5	LOCK	N	49,09
6	VOLTMETER 500V ANALOG 96X96	N	86,39
7	LOCKING-DOOR SWITCH	N	103,43
8	LOGO! TD DISPLAY	N	355,88
9	BLACK BUTTON	N	10,70
10	GREEN LIGHT BUTTONS	N	14,11
11	RED BUTTONS	N	10,70
12	RED LIGHT	N	10,91
13	ANCILLARY BATTERY 12V 6,3 Ah	N	41,35
14	UNIPOLAR FUSE CARRIER 10x38	N	5,63
14A	FUSE 10x38 16A	N	2,23
15	SUPPORT FOR FUSES 3P 10X38 (*)	N	19,03
15A	FUSE 10x38 4A	N	2,23
16	AUTHOMATIC SWITCH 4X16A	N	107,24
16A	COIL 24 Vac	N	35,04
17		N	
18	CONTACTORS FOR BURNER MOTOR SC03 24Vac	N	29,90
19	CONTACTORS FOR MOTOR DUST EXTRACTOR SC0 24Vac	N	35,18
19A	THERMAL RELAY TK-ON 6-4A	N	47,81
20	LOGO! LOGIC MODULE AC/DC	N	278,13
21	LOGO! AM2 RTD ANALOGIC EXPANSION (PT100)	N	253,31
22-23	BASE FOR RELAY FINDER 95.75	N	11,11
22A-23A	DOUBLE RELAY EXCHANGE 24 VAC	N	12,41
24	BASE FOR RELAY FINDER 95.75	N	11,11
23A	DOUBLE EXCHANGE RELAY 230VAC	N	20,08
25A	ACOUSTIC ALARM SUPPORT	N	6,75
25B	ACOUSTIC ALARM	N	194,88
26	RUBBER PANEL MOUNTING M10	N	11,17
30	TOP COVER FOR ELECTRIC PANEL	N	183,75

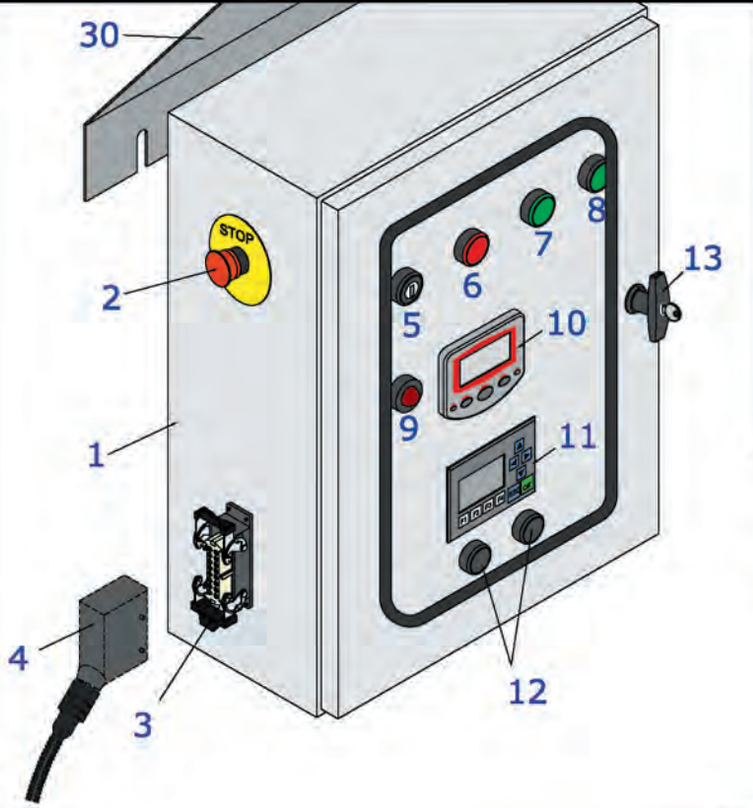

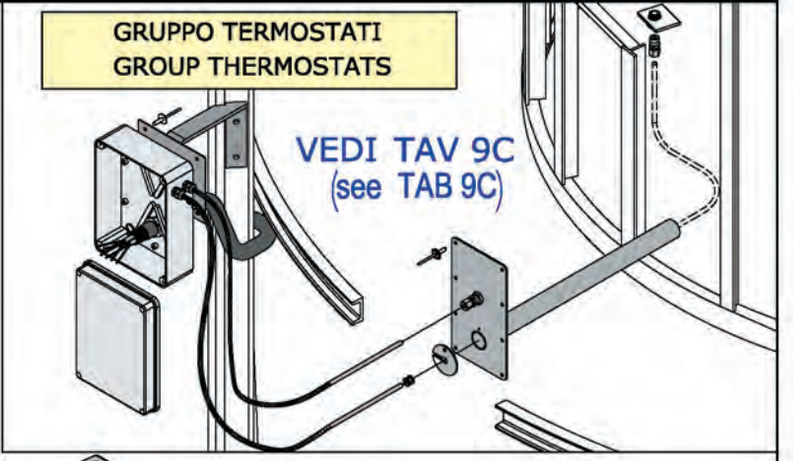

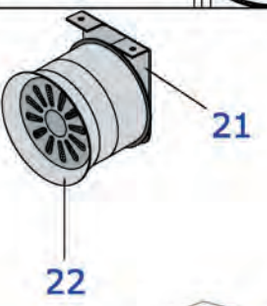

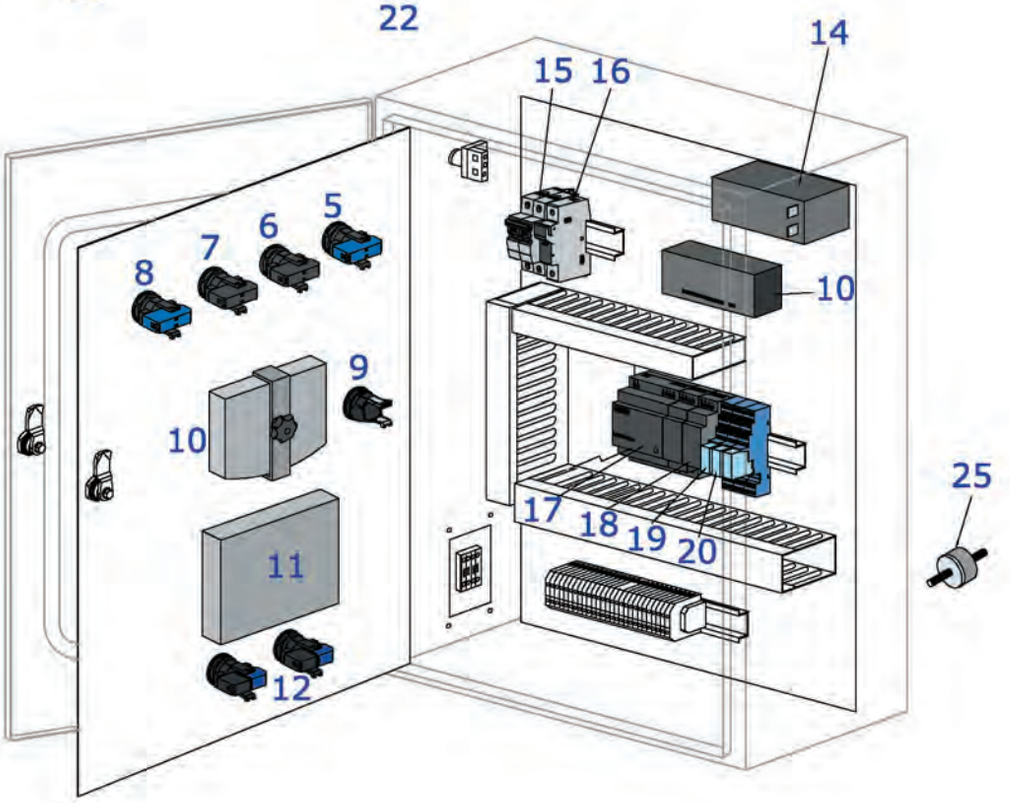

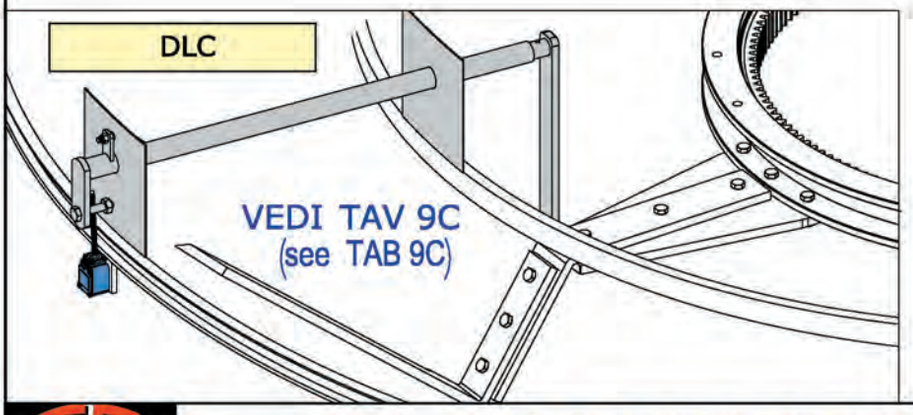

FP PEDROTTI ESSICCATOI

PLC ELECTRIC PANEL "12V MODEL"

TAB 9E
2013

ESSICCATOI	- - THERMOSTATS - DLC	JUNIOR-SUPER	TAB. 9E
		Sheet 1 of 1	2013

POS	DESCRIPTION	UM	Euro €
1	12v CONTROL PANEL EMPTY BOX	N	485,32
2	EMERGENCY STOP BUTTON	N	20,93
3	MULTIPLUG 16 POINTS CONNECTOR BURNER FIX	N	42,92
4	MULTIPLUG 16 POINTS CONNECTOR BURNER MOBILE	N	41,44
5	KEY SELECTOR 2 POSITIONS	N	27,38
6	RED LIGHT	N	10,91
7	GREEN PILOT LIGHT	N	10,88
8	GREEN BUTTON	N	20,74
9	LAMP HOLDER WITH LAMP 12V 2W	N	13,71
10	MOISTURE METER	N	2.847,00
11	LOGO! TD DISPLAY	N	355,88
12	BLACK BUTTON	N	10,70
13	LOCK	N	49,09
14	ANCILLARY BATTERY 12V 6,3 Ah	N	41,35
15	AUTHOMATIC SWITCH 2X10A	N	31,97
16	UNIPOLAR FUSE CARRIER 10x38	N	5,63
16A	FUSE 10x38 4A AM	N	2,23
17	LOGO! LOGIC MODULE AC/DC	N	278,13
18	LOGO! DM8 24R DIGITAL EXPANSION	N	174,47
19	LOGO! AM2 RTD ANALOGIC EXPANSION (PT100)	N	253,31
20	BASE FOR RELAY FINDER 95.75	N	11,11
20A	DOUBLE RELAY EXCHANGE 12 VDC	N	11,33
21	ACOUSTIC ALARM SUPPORT	N	6,75
22	ACOUSTIC ALARM	N	194,88
		N	
25	RUBBER MOUNTING M10	N	11,17
		N	
30	TOP COVER FOR ELECTRIC PANEL	N	183,75
		N	
		N	
		N	

ESSICCATOI

"PEDROTTI" BURNER

12 VOLTS

TAB.10

2005

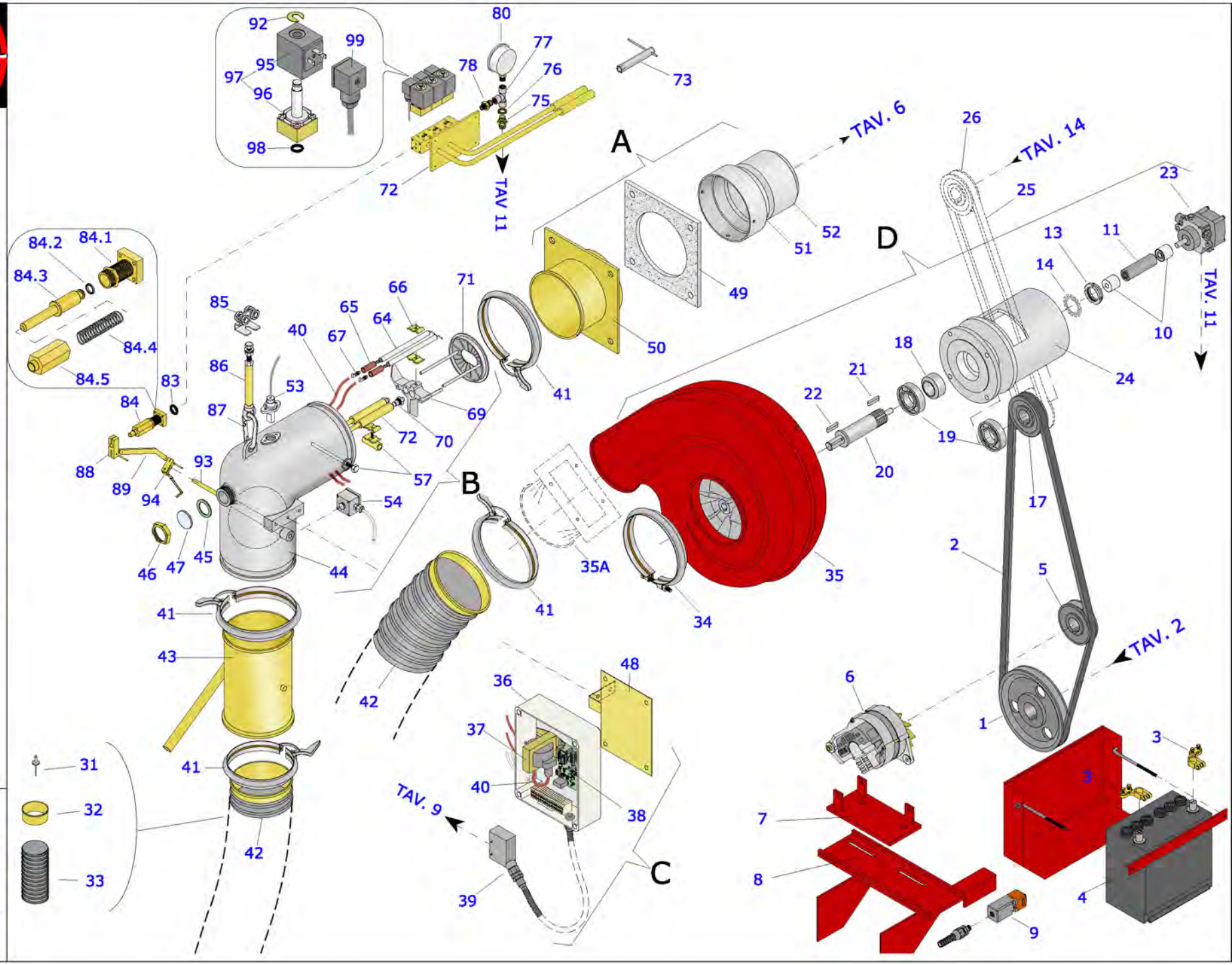

	BURNER 12 VOLTS - FUEL PUMP ALTERNATOR, BURNER FAN DRIVING	JUNIOR-SUPER	TAB. 10
		Sheet 1 of 2	2013

POS	DESCRIPTION	UM	Euro €
1	PULLEY B 200 1 GOLA	N	80,27
2	DRIVING BELT BX 57 TOP QUALITY	N	53,39
3	KLAMP	N	
4	BATTERY 12V 330 A	N	
5	ALTERNATOR PULLEY B 90 1 GOLA	N	79,20
6	ALTERNATOR	N	396,09
9	DOOR SAFETY SWITCH	N	64,09
10	COUPLING JOINT	N	5,69
11	SPLINED RUBBER SHAFT	N	7,54
13	LOCKING BOLT KM 7	N	5,18
14	TOOTHED RING	N	1,21
17A	PULLEY B 90 1 GOLA	N	79,20
17B	PULLEY B 90 2 GOLE	N	90,07
18	SPACER	N	14,88
19	BEARING 35X72 2RS 35X72X17 2RS STND	N	18,17
20	FAN-PUMP SHAFT	N	91,69
21	KEY 10X8X30	N	2,66
22	KEY 6X6X35	N	1,74
23	FUEL PUMP AJ6CC	N	402,41
24	ALLUMINIUM SUPPORT	N	260,75
25	DRIVING BELT BX 77 TOP QUALITY	N	65,18
26	PULLEY B 90 1 GOLA	N	79,20
31	RIVET	N	0,12
32	METAL TERMINAL END Ø 160	N	19,97
33	FLEXIBLE HOSE Ø 160	m	46,94
34	CLIP Ø 160	N	32,81
35	FAN HOUSING FRL 10	N	614,48
35A	LARGE ONLY	N	
36	PROTECTION BOX	N	38,43
37	IGNITION COIL	N	137,82
38	IGNITION P/C BOARD EMI 387 B	N	214,73
40	HT CABLE	N	13,49
41	FAST CLIP Ø 160	N	32,81
42	AIR DUCT Ø 160	N	219,29
43	AIR FLAP' Ø 160	N	108,77
44	ALLUMINIUM CASTING	N	347,60
45	GASKET	N	0,46
46	FIXING NUT	N	2,93
47	GLASS	N	2,58
48	IGNITION BOX SUPPORT	N	47,20
49	GASKET	N	34,79
50	BURNER SUPPORT PLATE	N	222,96
51	BURNER FUNNEL	N	105,78
52	BURNER FUNNEL INOX	N	89,20
53	PHOTOCELL	N	20,37
54	SAFETY THERMOSTAT TH4	N	49,45
57	FIXING BRACKET	N	57,61
64	ELECTROD	N	12,78
65	INSULATED PROTECTION	N	0,17
66	FIXING BRACKET	N	3,72
67	CONNECTING PLUG	N	0,84

ESSICCATOI

"PEDROTTI" BURNER

12 VOLTS

TAB.10

2005

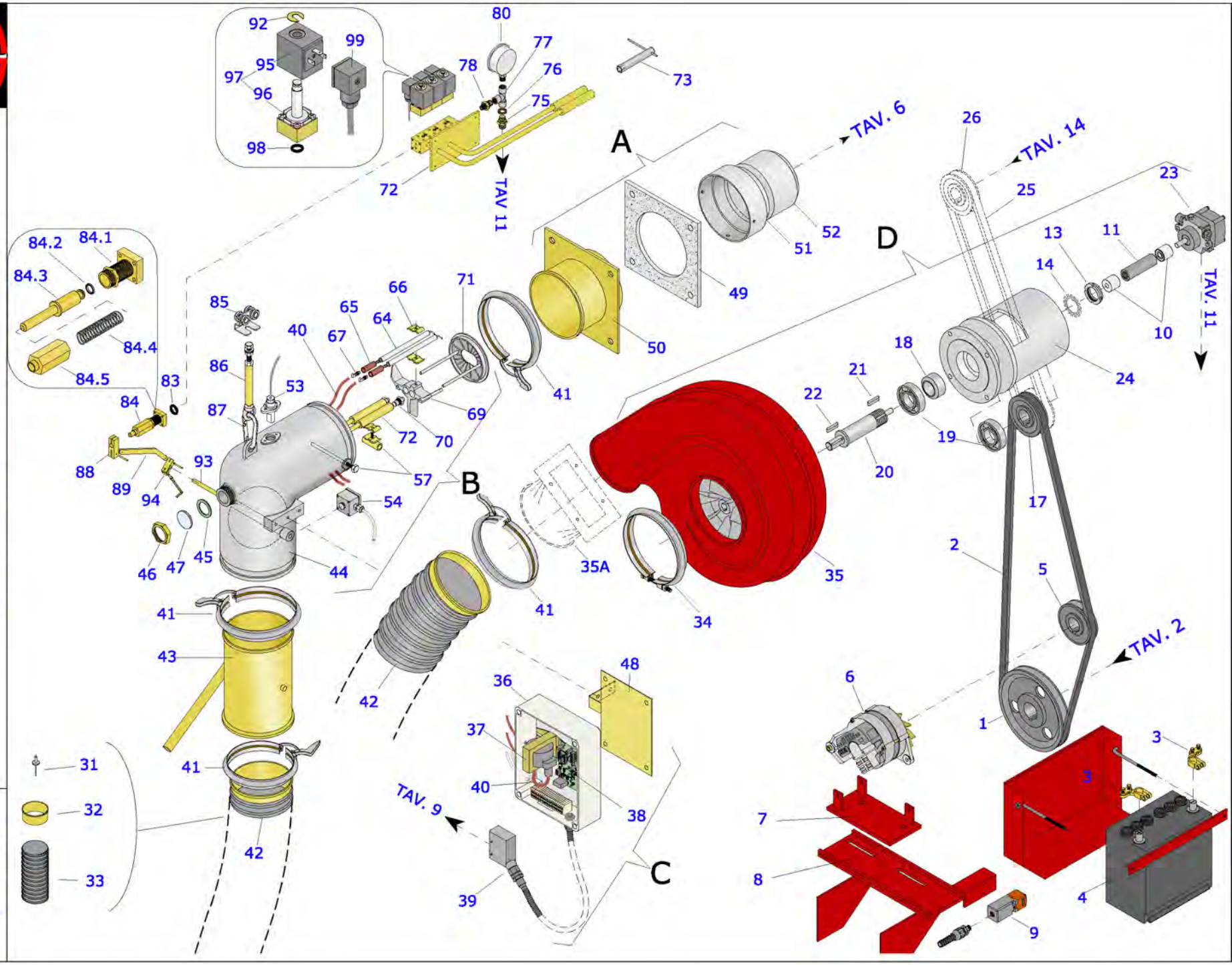

POS	DESCRIPTION	UM	Euro €
69	ELECTRODS SUPPORT	N	80,67
70	NOZZLE 60° UNTIL 8,5 gph	N	17,34
70A	NOZZLE 60° BEGINNING 8,5 gph	N	33,89
71	AIR DEFLECTOR	N	86,14
72	SOLENOIDS HOLDER - NOZZLE PIPES	N	294,54
73	NOZZLE SPANNER	N	8,58
75	MALE CONNECTOR 1/4" COUNTERSINK	N	1,64
76	COPPER GASKET 1/4"	N	0,63
77	T CONNECTOR	N	4,14
78	MALE CONNECTOR Ø 1/8-1/4"	N	1,56
80	FUEL PRESSURE GAUGE	N	14,60
83	"OR" SEAL FOR SOLENOID	N	0,15
84	SLIDING PISTON 2ND FLAME ADJUSTEMENT	N	77,13
84.2	INTERNAL SEAL FOR SLIDING PISTON 2ND FLAME	N	4,34
85	TROLLEY	N	11,57
86	SUPPORTING BAR	N	44,36
87	GALVANIZED BRAKET Ø 8	N	3,39
88	LEVER	N	14,73
89	LEVER	N	18,59
93	AIR FLAP SHAFT	N	28,50
94	LEVER	N	14,73
95	SOLENOID COIL 12V	N	27,25
96	SOLENOID	N	79,03
97	SOLENOID	N	108,30
98	"OR" SEAL FOR SLIDING PISTON 2ND FLAME	N	0,11
99	SOLENOID CONNECTOR	N	3,65
A	BURNER SUPPORT	N	514,55
B+C	BURNER WITH IGNITION PANEL	N	3.090,10
C	IGNITION PANEL FULLY ASSEMBLED	N	849,72
D	FUEL PUMP - MOTOR - FAN FRL 10 ASSEMBLY	N	1.659,15

FP PEDROTTI ESSICCATOI

PEDROTTI BURNER 380V

TAB 10A
2004

	PEDROTTI BURNER 380 VOLTS	JUNIOR-SUPER Sheet 1 of 2	TAB. 10A 2013

POS	DESCRIPTION	UM	Euro €
1	GALVANIZED BRAKET Ø 8	N	3,39
2	SUPPORTING BAR	N	44,36
3	TROLLEY	N	11,57
6	FIXING BRACKET	N	57,61
7	AIR FLAP' Ø 160	N	108,77
8	BURNER FUNNEL	N	213,64
9	GASKET	N	34,79
10	BURNER SUPPORT PLATE	N	222,96
11	MALE CONNECTOR Ø 1/8-1/4"	N	1,56
12	MALE CONNECTOR 1/4"	N	1,64
13	FIXING BRACKET	N	3,72
14	INSULATED PROTECTION	N	0,17
15	T 1/4" F	N	4,14
16	AIR DUCT FROM MAIN FAN 90 Cm	N	138,97
17	FAST CLIP Ø 160	N	32,81
18	ALLUMINIUM CASTING	N	347,60
19	AIR DUCT FROM BURNER 110 Cm	N	151,09
20	COPPER GASKET 1/4"	N	0,14
21	WIRING CABLE CONNEC. IGNITION PANEL TO FUEL MOTOR	N	87,36
22	MULTIPOINTS PLUG 6P M-F COMPLETE	N	49,65
22A	MULTIPOINTS PLUG 6P ON BOX	N	29,27
22B	MULTIPOINTS PLUG 6P ON CABLE	N	20,38
23	SOLENOIDS HOLDER - NOZZLE PIPES	N	294,54
24	HT CABLE	N	13,49
25	CONNECTING PLUG	N	0,84
28	RIVET	N	0,12
29	METAL TERMINAL END Ø 160	N	19,97
30	FLEXIBLE HOSE Ø 160	m	46,94
31	NOZZLE SPANNER	N	8,58
32	NOZZLE 60° UNTIL 8,5 gph	N	17,34
33	SPARK ELECTROD	N	12,78
34	AIR DEFLECTOR	N	86,14
35	FUEL PRESSURE GAUGE	N	14,60
36	SOLENOID	N	79,03
37	SLIDING PISTON 2ND FLAME ADJUSTEMENT	N	77,13
37.2	INTERNAL SEAL FOR SLIDING PISTON 2ND FLAME	N	4,34
38	"OR" SEAL FOR SLIDING PISTON 2ND FLAME	N	0,15
39	LEVER	N	0,20
40	LEVER	N	15,01
41	GLASS	N	2,58
42	GASKET Ø 1"1/4	N	0,46
43	FIXING NUT Ø 1"1/4	N	2,93
44	"OR" SEAL FOR BOTTOM SOLENOID	N	0,11
45	SOLENOID COIL 220V	N	27,25
46	SOLENOID CONNECTOR	N	3,65
48	PHOTOCELL	N	20,37
49	ELECTRODS SUPPORT	N	80,67
50	IGNITION TRANSFORMER	N	40,26
51	SOLENOID COIL AND SOLENOID BODY	N	106,27
52	CIRCLIP	N	

FP PEDROTTI ESSICCATOI

PEDROTTI BURNER 380V

TAB 10A
2004

	PEDROTTI BURNER 380 VOLTS	JUNIOR-SUPER Sheet 2 of 2	TAB. 10A 2013

POS	DESCRIPTION	UM	Euro €
53	CONTROL BOX BRAHMA GF2 OR GF3	N	91,94
53A	CONTROL BOX BRAHMA GF2 SOCKET	N	9,67
54	THERMAL RELAY TKON/T	N	47,81
55	IGNITION BOX	N	38,43
56	CONTACTOR SCO3T 220V	N	29,90
57	IGNITION BOX SUPPORT	N	47,20
58	CABLE FOR ELECTRIC PANEL	N	
59	MULTIPOINTS SOCKET 10P	N	27,05
61	LEVER OPERATING AIR FLAP FOR 2ND FLAME ADJUSTEMENT	N	18,59
62	LOKING KEY ADJUSTAMENT 1.ST FLAME	N	9,54
63	LEVER	N	14,57
65	PIN	N	0,24
66	AIR FLAP SHAFT	N	28,50
67	FLAP	N	19,41
68	COMPLET FAN	N	614,48
69	PROTECTION GUARD	N	23,29
70	ELECTRIC MOTOR 0,75 KW (HP 1) TWIN SHAFT	N	408,80
71	DRIVING JOINT	N	51,82
71.1	BODY OF DRIVING JOINT	N	21,24
71.2	RUBBER OF DRIVING JOINT	N	9,34
72	FUEL PUMP SUNTEC AJ6CC	N	402,41
73	FUEL PUMP SPACER	N	23,49
74	FITTING Pg 16	N	1,22
75	FIXING PLATE	N	82,14
76	REDUCTION M20X1,5 - Pg 16	N	6,60
77	SAFETY THERMOSTAT TH4	N	49,45
78	FITTING Pg 7	N	1,70
79	WELDING METAL TERMINAL END	N	30,36
		N	
A	BURNER SUPPORT	N	514,55
B-C	BURNER (WITHOUT FUEL PUMP-MOTOR-FAN)	N	3.012,10
C	IGNITION PANEL FULLY ASSEMBLED	N	771,73
D	FUEL PUMP - MOTOR 1HP- FAN ASSEMBLY	N	1.768,22
E	BURNER COMPLETE (A+B+C+D)	N	5.945,12

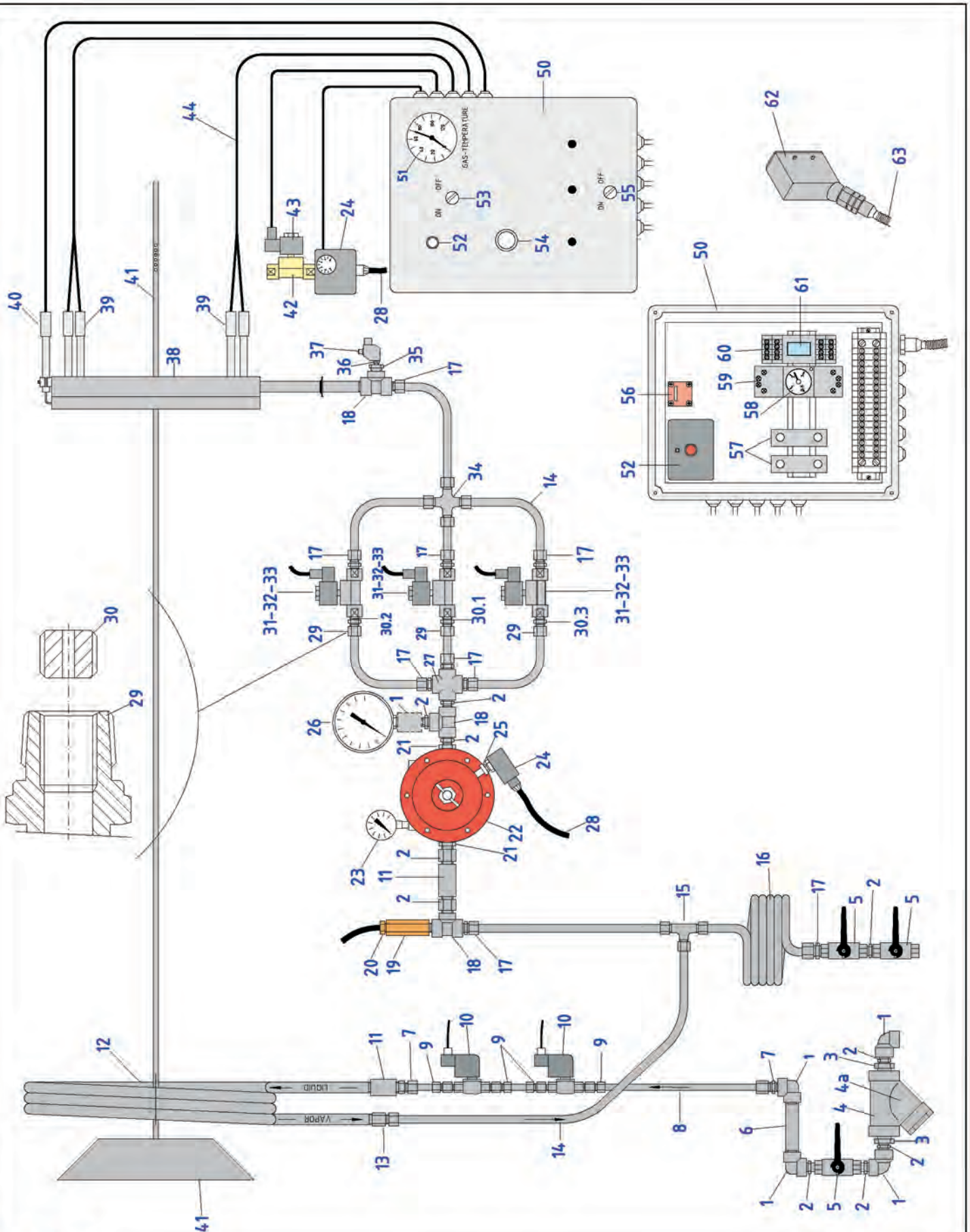

GPL BURNER

TAB 10B
2004

ESSICCATOI

	GPL BURNER	JUNIOR-SUPER	TAB.10B
		Sheet 1 of 2	2013

POS	DESCRIPTION	UM	Euro €
1	90° ELBOV 1/2 NPT S 3000	N	7,43
2	NIPPLE 1/2" NPT M-M S-3000	N	5,28
3	REDUCTION 1" - 1/2" M-F S-3000	N	7,90
4	CATRIDGE FILTER 1" F-F	N	182,50
4A	FILTRE SPARE KIT	N	
5	COCK BALL VALVE 1/2" F-F	N	12,78
6	NIPPLE 1/2" L=120 M-M	N	25,05
7	FITTING 1/2" M ø12 PIPE	N	10,09
8	INOX PIPE Ø 12x1,5	m	38,72
9	FITTING 1/4" NPT ø 12 PIPE	N	8,48
10A	SOLENOID	N	105,49
10B	COIL OF SOLENOID VALVE 1/4"	N	
11	COUPLING 1/2" NPT S-3000	N	4,29
12	VAPORIZER	N	404,50
13	FITTING 1/2" F ø15 PIPE	m	11,58
14	INOX PIPE Ø 15x1,5	N	28,11
15	TEE FITTING Ø 15	N	38,13
16	OIL TRAP	N	64,61
17	FITTING 1/2" M ø15 PIPE	N	11,58
18	TEE 1/2" NPT F S-3000	N	8,34
19	PROBE GAS TEMPERATURE	N	
20-51	GAS TEMPERATURE GAUGE	N	197,10
21	REDUCTION 3/4" - 1/2" NPT M-F S-3000	N	5,65
22	GAS PRESSURE REGULATOR	N	220,91
23	GAS PRESSURE GAUGE 0-25 bar	N	53,29
24	PRESSOSTAT 2,5-50 mb	N	64,93
25	NIPPLE 1/4" M	N	1,64
26	GAS PRESSURE GAUGE 0-4 bar	N	49,64
27	CROSS 1/2" NPT S-3000	m	20,62
28A	FLEXIBLE HOSES GL10	N	1,95
28B	FITTINGS FOR FLEXIBLE HOSES	N	1,78
29	FITTING 1/2" NPT MODIFIED	N	29,83
30,1	NOZZLE 1st FLAME	N	27,94
30,2	NOZZLE 2nd FLAME	N	27,94
30,3	NOZZLE 3rd FLAME	N	27,94
31	SOLENOID VALVE 1/2" GAS 1522/045	N	58,40
32	COIL OF SOLENOID VALVE 1/2" HM2	N	20,08
33	CONNECTOR	N	3,65
34	CROSS FITTING FOR PIPE Ø 15	N	96,15
35	PLUG Ø 1/2" NPT S-3000 MODIFIED	N	30,21
36	NIPPLE Ø1/4" M - 1/4"M lefth	N	
37	VALVE 1/4"-1/4" FF	N	
38	BURNER HEAD	N	522,01
39	SPARK ELECTRODS	N	
40	FLAME DETECTOR PROBE	N	8,58
41	AIR DIVERTER	N	288,34
42	AIR SOLENOID VALVE L 336	N	
43	COIL AIR SOLENOID VALVE Z 530 A 220V	m	
44	HT CABLE		3,19

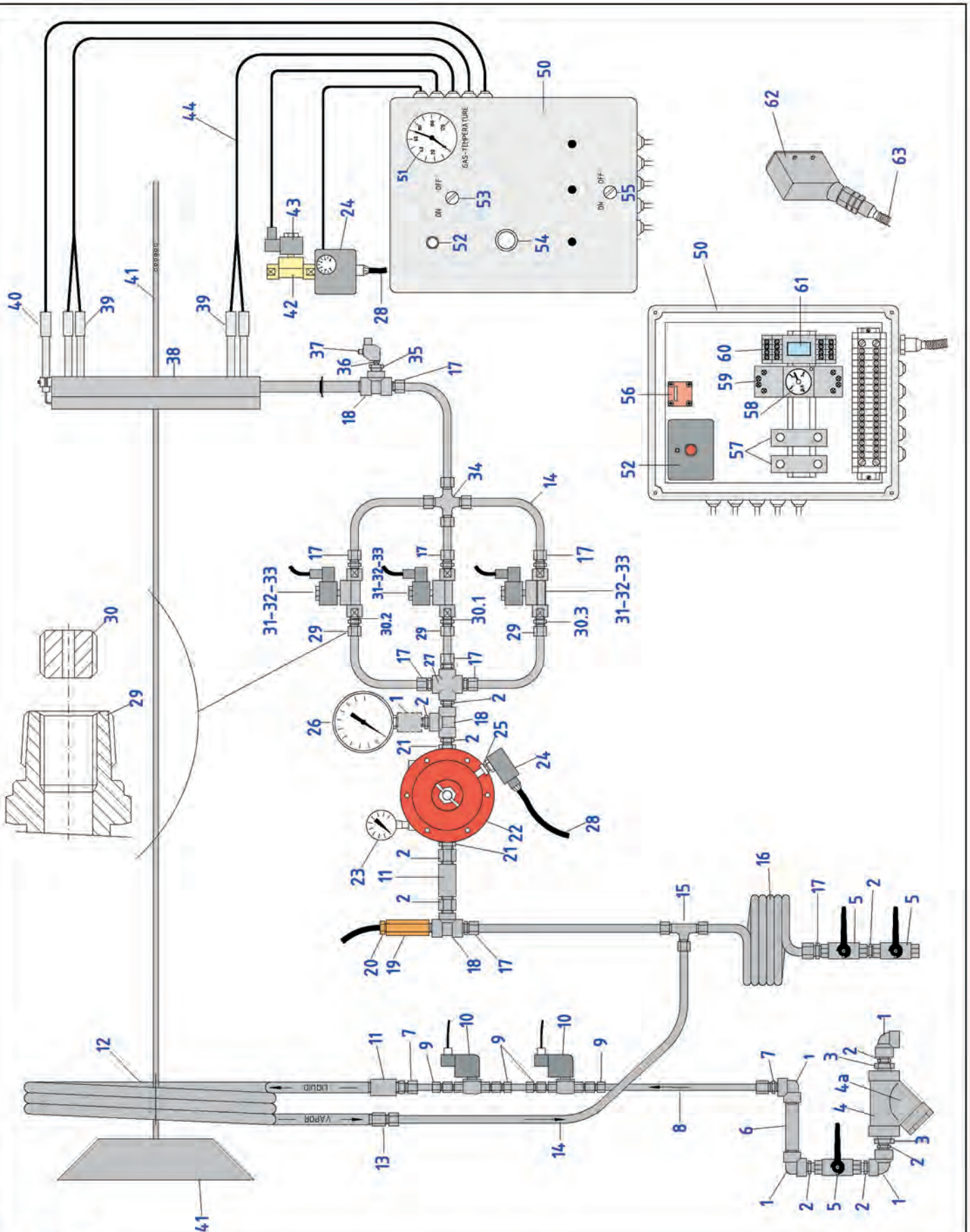

GPL BURNER

TAB 10B
2004

ESSICCATOI

	GPL BURNER	JUNIOR-SUPER	TAB.10B
		Sheet 2 of 2	2013

POS	DESCRIPTION	UM	Euro €
50	PROTECTION BOX	N	
52	BURNER CONTROL VM42+NE	N	192,54
53	2nd FLAME SWITCH	N	
54	RESET BUTTON	N	
55	GENERAL SWITCH	N	
56	DOOR SAFETY SWITCH	N	
57	IGNITION TRANSFORMER	N	40,26
58	TIMER 3rd FLAME	N	
59	TIMER SOCKET	N	
60	MEMORY SOCKET	N	11,20
61	MEMORY MY2K	N	91,74
62	CONNECTOR	N	41,44
63A	FLEXIBLE HOSES GL16	m	1,93
63B	FITTINGS FOR FLEXIBLE HOSES	N	1,55

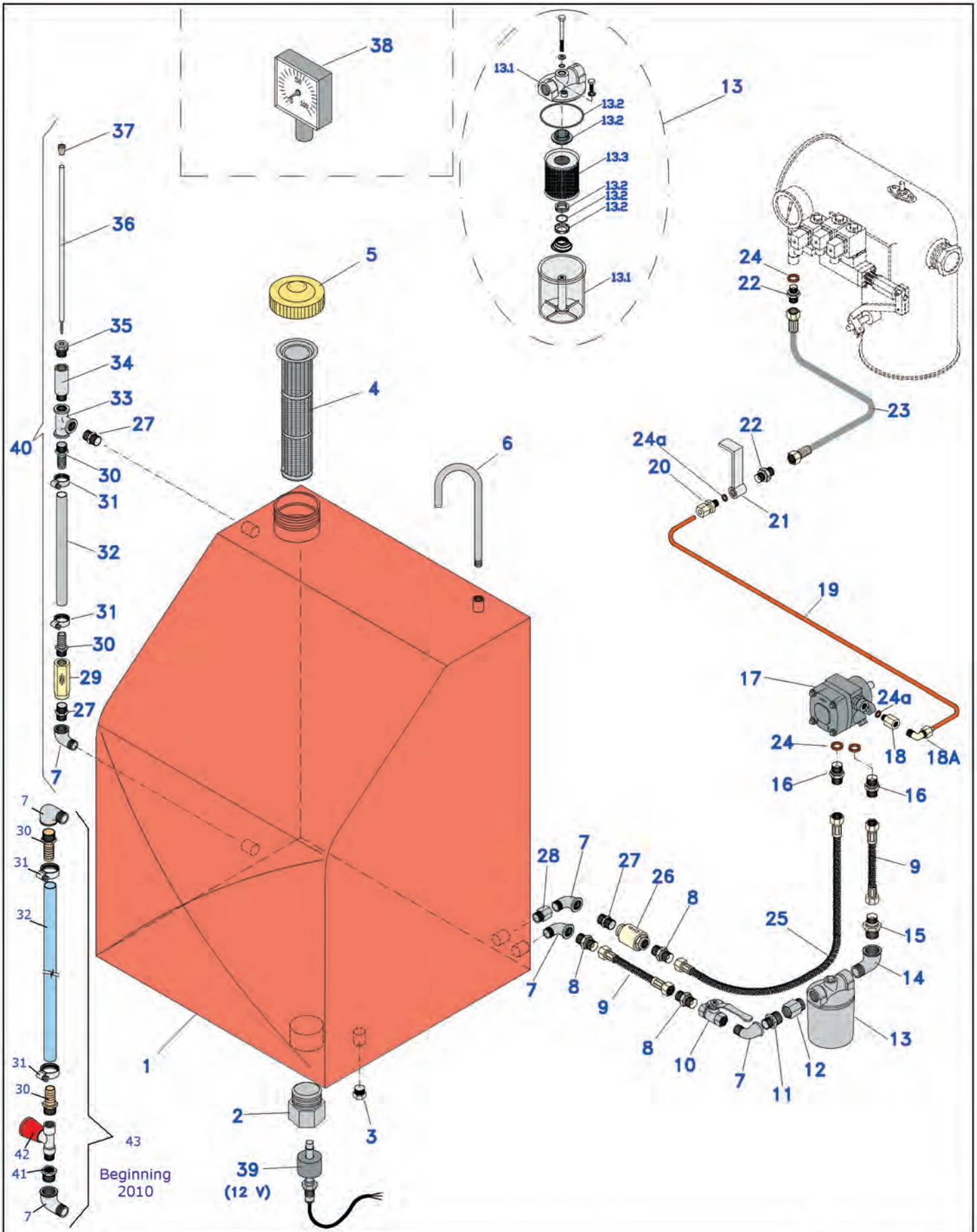

FP PEDROTTI ESSICCATOI

FUEL PLANT SYSTEM

TAB 11
2010

	FUEL PLANT SYSTEM	JUNIOR-SUPER	TAB. 11
		Sheet 1 of 1	2013

POS	DESCRIPTION	UM	Euro €
1	FUEL TANK	N	939,19
2	PLUG 1"1/2	N	4,30
3	PLUG 1/2"	N	1,37
4	ENTRY FUEL TANK FILTER	N	60,66
5	FUEL TANK CAP	N	27,45
6	EXSAUST	N	23,43
7	BREATHER	N	2,69
8	NIPPLE 3/8"	N	2,74
9	FUEL FLEXIBLE HOSES 3/8" L=80 Cm	N	19,81
10	BALL VALVE ON/OFF 3/8"	N	10,42
11	MALE CONNECTOR 3/8"-1/2"	N	3,23
12	EXSTENSION	N	1,30
13A	MAIN FILTER COMPLET	N	44,17
13B	FILTER C/W FUEL PRE-HEATING	N	169,18
13,1	EMPTY MAIN BODY FILTER	N	27,45
13,2	SEAL KIT MAIN FILTER	N	9,56
13,3A	FILTER ONLY	N	16,90
13,3B	FILTER ONLY PRE-HEATING	N	23,54
14	CURVE	N	2,08
15	MALE CONNECTOR 3/8-1/2 COUNTERSINK	N	3,23
16	MALE CONNECTOR 1/4-3/8 COUNTERSINK	N	2,56
17	FUEL PUMP SUNTEC AJ6CC	N	402,41
18	EXSTENSION Ø 1/8" L=20 MF	N	1,35
18A	FITTING 1/8" 90° FOR COPPER PIPE ø8	N	5,90
19	COPPER PIPE Ø 8	Kg	44,71
20	FITTING 1/4" FOR COPPER PIPE ø8	N	2,96
21	COUPLING 1/4"	N	14,58
22	MALE CONNECTOR 1/4" COUNTERSINK	N	1,64
23	HIGH PRESSURE FUEL RUBBER HOSE 1/4" L=100 Cm	N	21,55
24	COPPER GASKET 1/4"	N	0,63
24A	COPPER GASKET 1/8"	N	0,18
25	FUEL FLEXIBLE HOSES 3/8" L=180 Cm	N	44,08
26	NON RETURN VALVE 3/8"(EUROPA)	N	13,34
27	MALE CONNECTOR 3/8"	N	1,22
28	EXTENSION	N	1,47
29	NON RETURN VALVE 3/8"	N	33,99
30	RUBBER FIXING	N	2,63
31	FIXING CLIP	N	2,12
32	FUEL LEVEL PIPE	m	3,76
33	T 3/8" F	N	2,62
34	EXTENSION	N	4,75
35	PLASTIC PLUG 3/8"	N	5,18
36-37	LEVEL ROD	N	11,23
38	LEVEL GAUGE (WHEN FITTED)	N	113,76
39	SAFETY SWITCH MIN. LEVEL (12V machines only)	N	137,46
40	KIT FUEL LEVEL	N	77,40
41	REDUCTION 3/8"-1/4"	N	1,12
42	FUEL LEVEL TAP	N	36,50
43	KIT FUEL LEVEL 2010	N	68,64

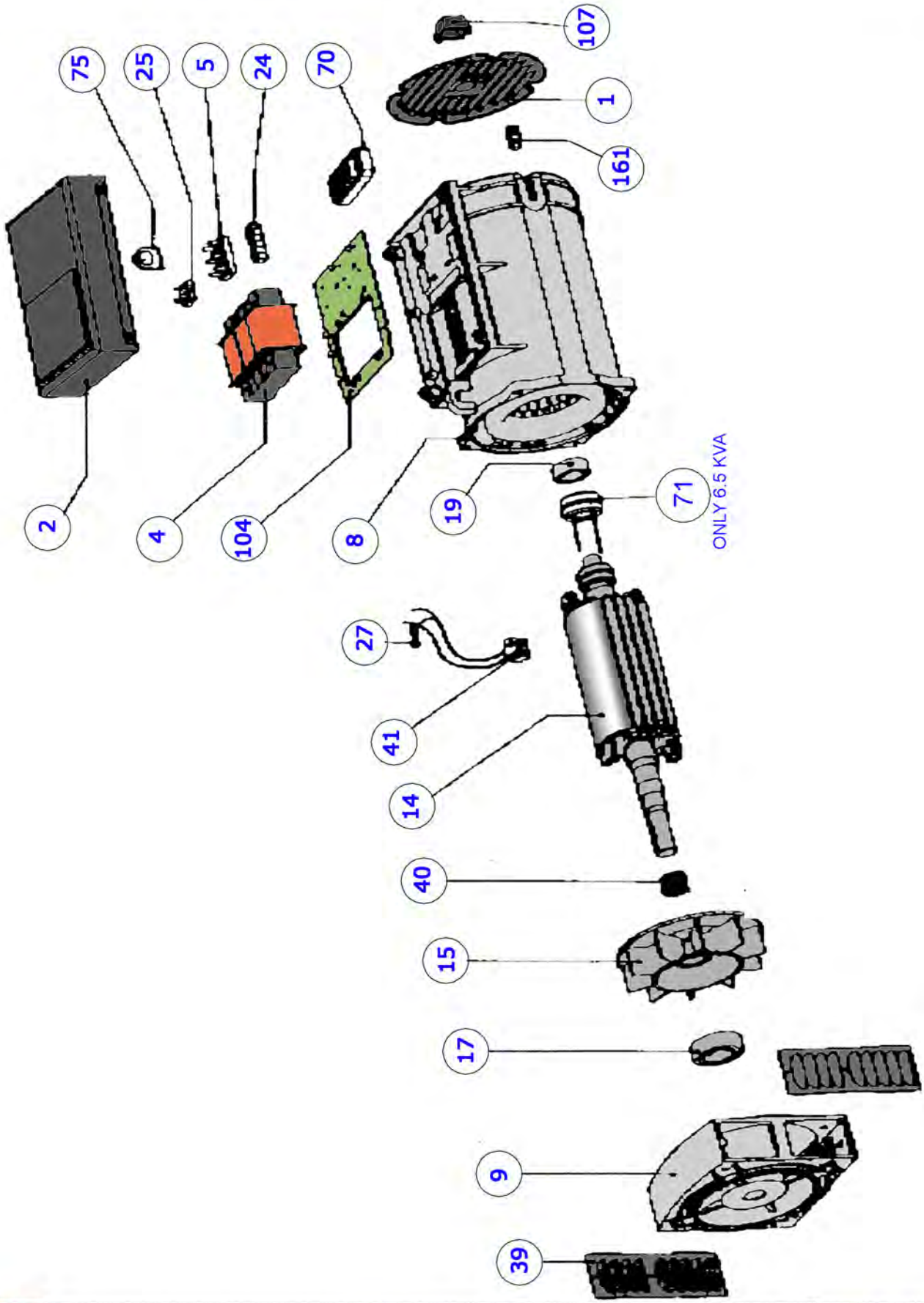

ESSICCATOI

GENERATOR

TAB. 12
2005

	SPARE PARTS GENERATOR	JUNIOR-SUPER Sheet 1 of 1	TAB. 12 2013

POS	DESCRIPTION	UM	Euro €
	SERIE TR1 6,5 KVA	N	
1	REAR GRID	N	7,46
2	TERMINAL BOX LID	N	31,07
4	REGULATING TRANSFORMER	N	239,00
5	TERMINAL BOARD	N	10,97
8	FRAME AND STATOR	N	862,32
9	DRIVE AND BRACKET	N	89,76
14	ROTOR ASSY	N	702,91
15	FAN	N	14,72
17	FRONT BEARING	N	25,06
19	REAR BEARING	N	30,06
24	AUXILIARY TERMINAL BOARD	N	10,78
25	RECTIFYNG 1 PHASE BRIDGE	N	47,47
27	VARISTOR	N	5,18
39	PROTECTION SCREEN	N	8,89
40	FIXING RING	N	2,59
41	BRUSH GEAR ASSEMBLY	N	44,29
70	RADIO INTERFERENCE SUPPRESSOR	N	398,82
71	SLIP RING	N	47,05
75	CABLE GROMMET	N	1,97
104	COMPONENT HOLDING PANEL	N	34,00
107	GRID RUBBERCAP	N	5,18
161	RUBBER CAP	N	0,93
		N	
		N	
		N	
	SERIE TR2 12,5 KVA	N	
1	REAR GRID	N	9,72
2	TERMINAL BOX LID	N	31,07
4	REGULATING TRANSFORMER	N	271,73
5	TERMINAL BOARD	N	10,97
8	FRAME AND STATOR	N	1.071,68
9	DRIVE AND BRACKET	N	88,93
14	ROTOR ASSY	N	957,46
15	FAN	N	28,81
17	FRONT BEARING	N	42,29
19	REAR BEARING	N	24,87
24	AUXILIARY TERMINAL BOARD	N	10,78
25	RECTIFYNG 1 PHASE BRIDGE	N	47,47
27	VARISTOR	N	5,18
39	PROTECTION SCREEN	N	9,54
40	FIXING RING	N	7,05
41	BRUSH GEAR ASSEMBLY	N	44,29
70	RADIO INTERFERENCE SUPPRESSOR	N	398,82
75	CABLE GROMMET	N	1,97
104	COMPONENT HOLDING PANEL	N	34,00
107	GRID RUBBERCAP	N	5,18
161	RUBBER CAP	N	0,93

ESSICCATOI

DESACHARGING CHUTE

TAB. 13
2012

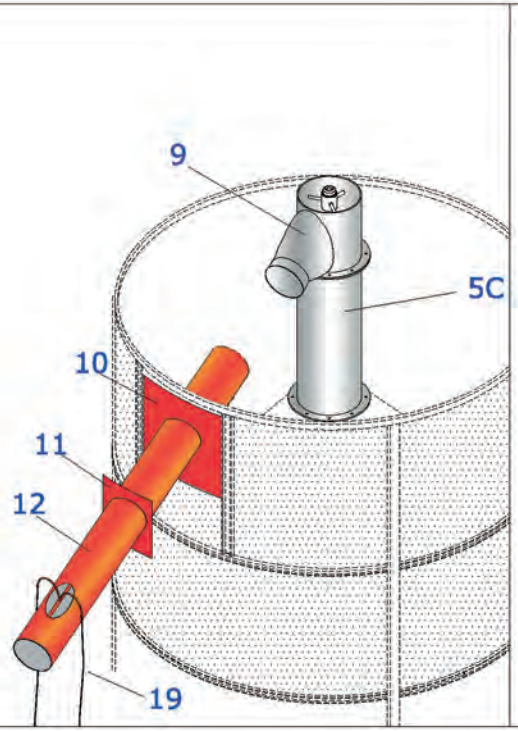

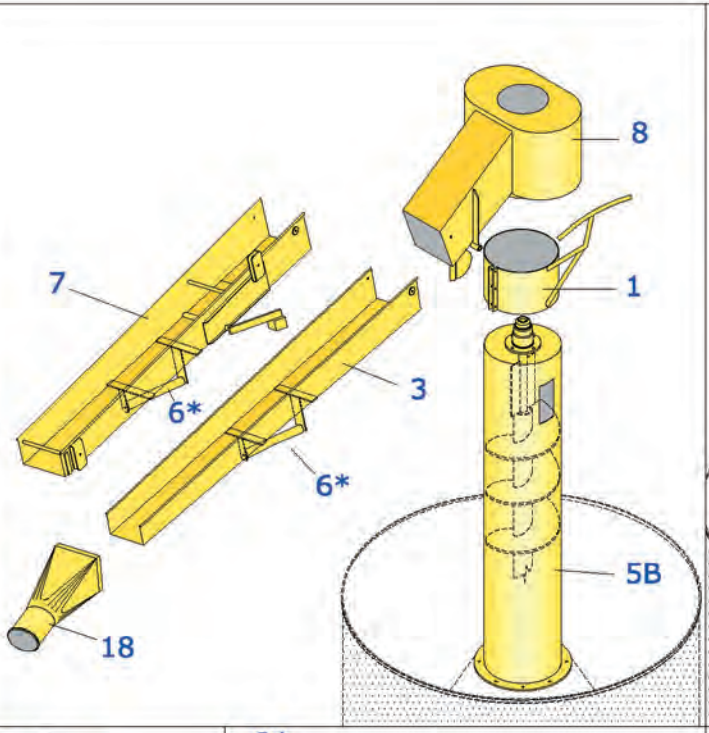

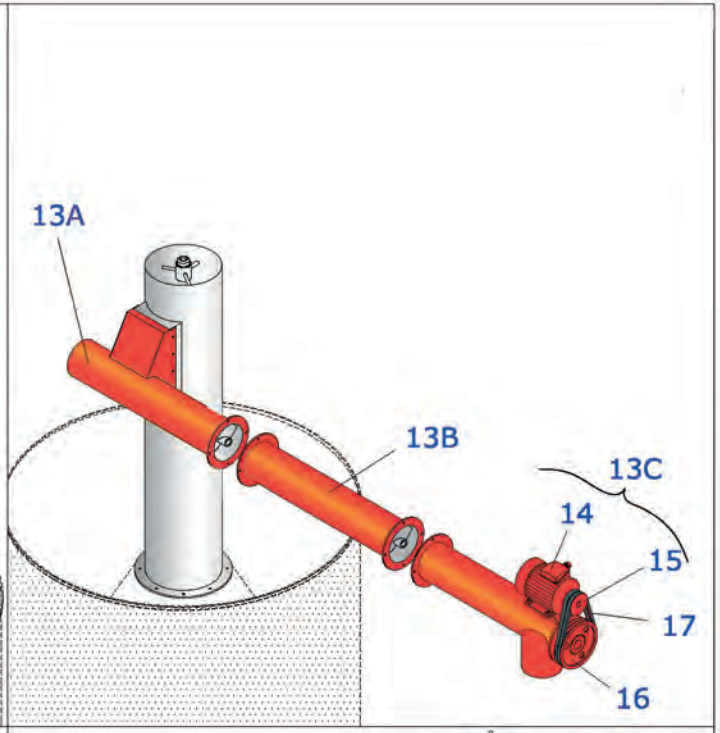

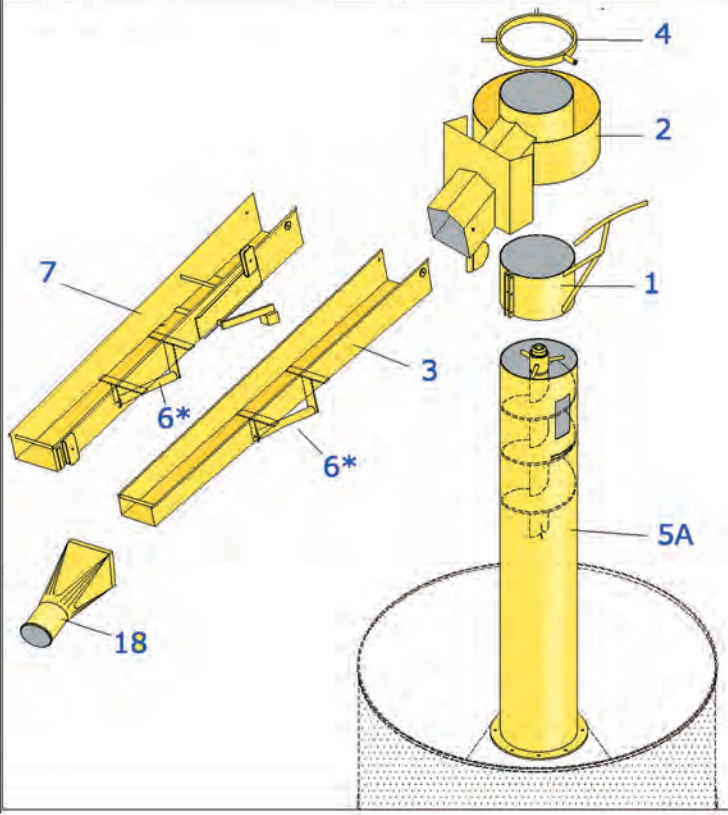

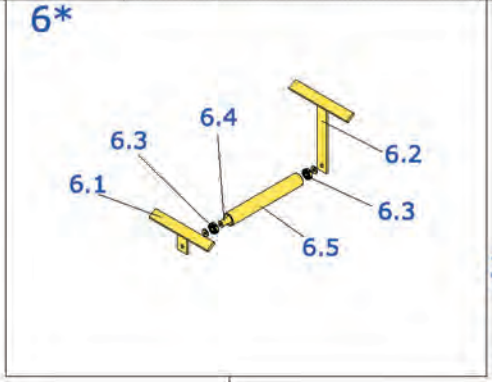

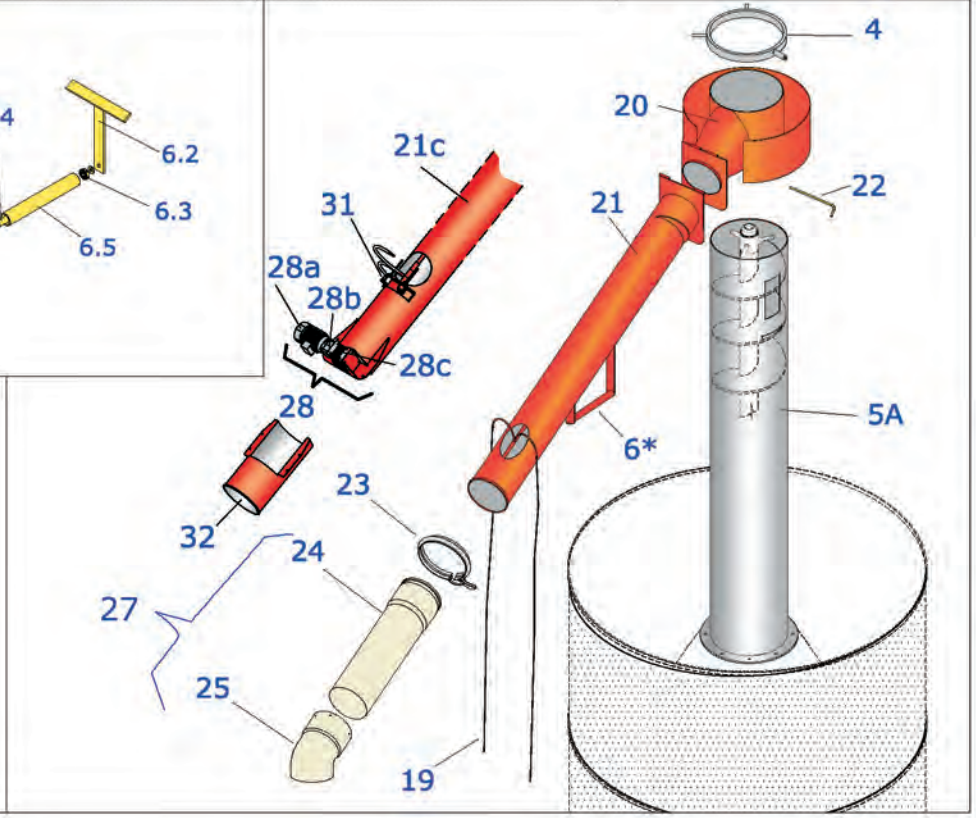

	DESACHARGING CHUTE	JUNIOR-SUPER	TAB. 13
		Sheet 1 of 1	2013

POS	DESCRIPTION	UM	Euro €
1	TOP HAT GUIDE FOR FLAP "UP/DOWN"	N	173,05
2	ROTATING TOP HAT	N	801,24
3	DESACHARGING CHUTE WITH ROLLER	N	354,84
3A	DESACHARGING CHUTE	N	210,65
4	HEAD EXTRACTOR FIXING SUPPORT	N	178,23
5A	SEE "TAB. 00" (TUBES FOR CENTRE AUGER "C")		
5B	SEE "TAB. 00" (TUBES FOR CENTRE AUGER "B")		
5C	SEE "TAB. 00" (TUBES FOR CENTRE AUGER "D")		
6	GUIDE ROLLER FOR DESCHARGING CHUTE	N	125,10
6.1-6.2	ROLLER SUPPORT	N	91,98
6.3	BEARING 6004 2RS	N	4,20
6.4	ROLLER PIN	N	23,71
6.5	ROLLER BODY	N	23,73
7	DESACHARGING CHUTE WITH ROLLER AND FLAP	N	607,96
8	ROTATING TOP HAT TOP TUBE STND	N	593,06
9A	SINGLE FIX TOP HAT	N	646,52
9B	DOUBLE FIX TOP HAT	N	883,84
10	FIXING PLATE	N	74,67
11	WELDED FIXING PLATE	N	47,68
12.1	UNLOADIN PIPE Ø 250 L=2000	N	510,33
12.2	UNLOADIN PIPE Ø 250 L=2300	N	581,13
13A.1	CROSS AUGER - INITIAL SECTION 2m	N	1.096,10
13A.2	CROSS AUGER - INITIAL SECTION 3m	N	1.171,91
13B.1	CROSS AUGER - INTERMEDIATE SECTION L=1m	N	813,87
13B.2	CROSS AUGER - INTERMEDIATE SECTION L=2m	N	881,38
13B.3	CROSS AUGER - INTERMEDIATE SECTION L=3m	N	957,19
13C	CROSS AUGER - TERMINAL SECTION	N	2.893,09
14	ELECTRIC MOTOR 5,5 KW (7,5 HP) 1500 g/1'	N	890,60
15	PULLEY A 90 3 RACES	N	55,77
16	PULLEY A 250 3 RACES	N	112,88
17	BELTS A 44 TOP QUALITY	N	15,84
18	ADAPTOR	N	218,90
19	ROPE	m	2,58
20	ROTATING TOP HAT FOR PIPE Ø 250	N	448,41
21	ROTATING UNLOADIN PIPE Ø 250 L=2000	N	881,16
21C	AUTOMATIC UNLOADING CHUTE Ø 250 L=2000	N	1.946,05
22	PIN Ø 18	N	15,55
23	FAST CLIP Ø 250	N	53,73
24	METAL TERMINAL END Ø 250	N	25,46
25	PVC HOSE SECTION Ø 250 L=1m	N	40,19
26	PVC CURVE 45° Ø 250 M-F	N	76,65
27	EXTENTION ADAPTOR ZINC-PLATED	N	184,72
28	MICRO MOTOR C/W REDUCER FOR AUTOMATIC UNLOADING	N	688,21
28A	MICRO MOTOR 0,18 Kw 4P B5	N	185,42
28B	COUPLING MOTOR/REDUCER	N	169,73
28C	REDUCER GEAR SRT 50	N	284,70
31	LIMIT SWITCH	N	41,74
32	EXTENSION FOR AUTOMATIC UNLOADING CHUTE	N	83,95

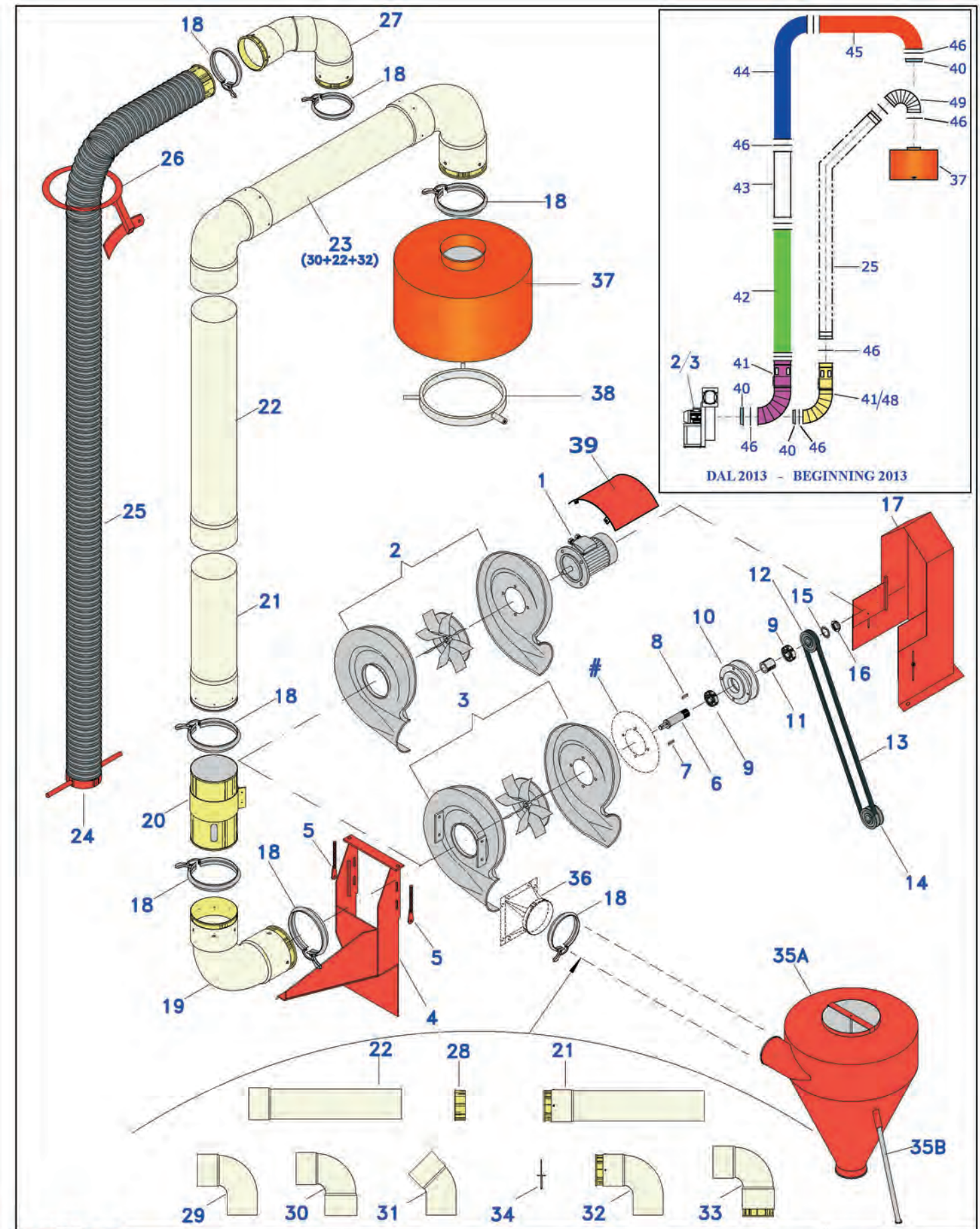

FP PEDROTTI ESSICCATOI

DUST EXTRACTOR SYSTEM

TAB 14
2013

	DUST EXTRACTOR SYSTEM	JUNIOR-SUPER	TAB. 14
		Sheet 1 of 2	2013

POS	DESCRIPTION	UM	Euro €
1A	ELECTRIC MOTOR 0,75 KW (HP 1) FOR FAN FRL 10	N	303,68
1B	ELECTRIC MOTOR 2,2 KW (HP 3) FOR FAN KB 401 RD	N	372,30
1C	ELECTRIC MOTOR 2,2 KW (HP 3) FOR FAN KM	N	372,30
2A	FAN FRL 10	N	614,48
2B	FAN KB 401 RD P4A	N	1.147,43
2C	FAN KM 311 RD R4A	N	892,88
3A	FAN FRL10 PER 12V (HP1)	N	752,15
3B	FAN KB 401 RD PER 12V	N	1.225,12
4	SUPPORTING STEEL FRAME FOR FAN UNTI	N	458,54
5	BELT TENSIONNER	N	20,62
6A	DRIVE SHAFT FOR FAN FRL 10	N	91,69
6B	DRIVE SHAFT FOR FAN KB 401 RD	N	91,69
7A	KEY 6X6X35	N	1,74
7B	KEY 8X7X35	N	1,74
8	KEY 10X8X30	N	2,66
9A	BEARING 35X72X17 6207 2RS STND	N	18,17
9B	BEARING 35X72X17 6207 2RS TOP QUALITY	N	26,46
10	ALLUMINIUM SUPPORT	N	218,79
11	SPACER Ø 35 L.= 30	N	14,88
12A	PULLEY B 90 1 RACE	N	79,20
12B	PULLEY B 112 2 RACES	N	51,34
13	BELT BX 77 TOP QUALITY	N	65,18
14	PULLEY B 90 2 RACES	N	90,07
15	TOOTHED RING	N	1,21
16	LOCKING BOLT KM 7	N	5,18
17	GUARD	N	277,96
18A	FAST CLIP Ø 160	N	32,81
18B	FAST CLIP Ø 200	N	35,58
19A	CURVE 90° PVC Ø 160 F-F C/W 2 METAL TERMINALS	N	136,59
19B	CURVE 90° PVC Ø 200 F-F C/W 2 METAL TERMINALS	N	149,01
20A	ADJUSTING ASPIRATION VALVE Ø 160	N	107,83
20B	ADJUSTING ASPIRATION VALVE Ø 200	N	114,45
21A	PVC HOSE SECTION Ø 160 C/W 1 METAL TERMINAL	N	85,05
21B	PVC HOSE SECTION Ø 200 C/W 1 METAL TERMINAL	N	99,89
22A	PVC HOSE SECTION Ø 160 L=1m	N	18,85
22B	PVC HOSE SECTION Ø 160 L=2m	N	36,44
22C	PVC HOSE SECTION Ø 160 L=3m	N	48,82
22D	PVC HOSE SECTION Ø 200 L=1m	N	27,08
22E	PVC HOSE SECTION Ø 200 L=2m	N	49,91
22F	PVC HOSE SECTION Ø 200 L=3m	N	67,45
23A	PVC HOSE SECTION Ø 160 C/W 2 CURVES	N	175,32
23B	PVC HOSE SECTION Ø 200 C/W 2 CURVES	N	215,19
24	TERMINAL BRACKET FOR FLEXIBLE HOSE Ø 160	N	46,90
25	FLEXIBLE HOSE Ø 160 .	m	46,94
25,1	FLEXIBLE HOSE Ø 200 .	m	67,89
25A	FLEXIBLE HOSE Ø 160 C/W 2 METAL TERMINAL	N	326,02
26	BLOCKING RING FOR FLEXIBLE HOSE	N	122,88
27	TWIN CURVE PVC Ø 160	N	148,72
28A	METAL TERMINAL END Ø 160	N	19,97
28B	METAL TERMINAL END Ø 200	N	21,33

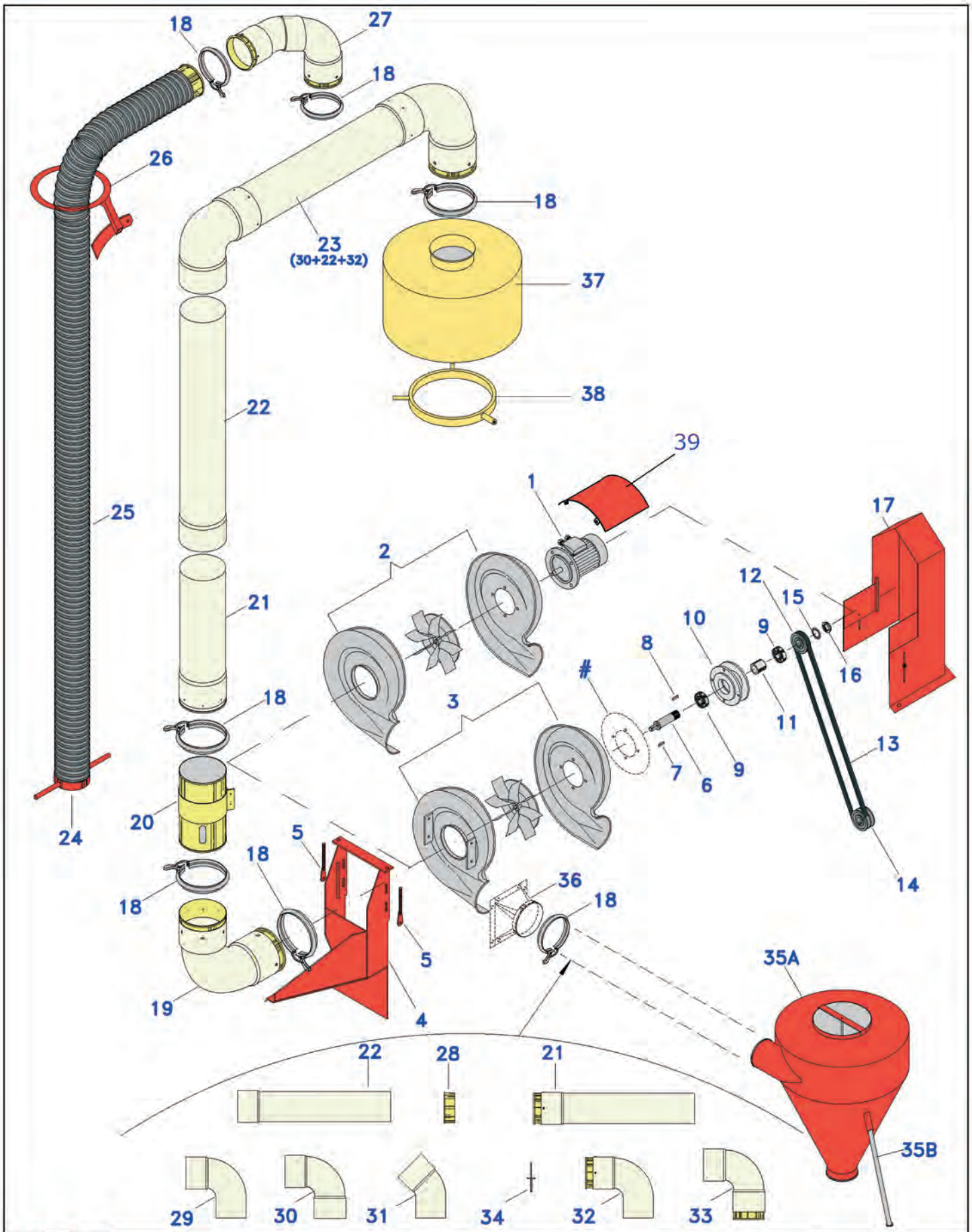

FP PEDROTTI ESSICCATOI

DUST EXTRACTOR SYSTEM

TAB 14
2010

POS	DESCRIPTION	UM	Euro €
29A	PVC CURVE 90° Ø 160 M-F	N	20,58
29B	PVC CURVE 90° Ø 200 M-F	N	35,92
30A	PVC CURVE 90° Ø 160 F-F	N	30,64
30B	PVC CURVE 90° Ø 200 F-F	N	40,33
31	PVC CURVE 45° Ø 160 M-F	N	11,47
32A	PVC CURVE 90° Ø 160 M-F C/W 1 METAL TERMINAL	N	69,20
32B	PVC CURVE 90° Ø 200 M-F C/W 1 METAL TERMINAL	N	85,90
33A	PVC CURVE 90° Ø 160 F-F C/W 1 METAL TERMINAL	N	79,25
33B	PVC CURVE 90° Ø 200 F-F C/W 1 METAL TERMINAL	N	90,31
34	RIVET	N	0,13
35A	DUST CYCLONE Ø 900	N	739,51
35B	SUPPORTING LEG	N	169,88
35C	SUPPORT FOR CYCLONE Ø 900	N	214,41
36A	ADAPTOR FAN KB 401	N	93,87
36B	ADAPTOR FAN KM 311	N	199,36
37	HEAD OF EXTRACTOR	N	365,85
38	HEAD EXTRACTOR FIXING SUPPORT	N	178,23
39	COVER OF MOTOR EXTRACTOR	N	29,20
#	SUPPORTING FRAME FOR FAN FRL 10 (Only 12V HP 1)	N	37,23
40A	METAL TERMINAL END Ø 160 H35	N	9,95
40B	METAL TERMINAL END Ø 200 H35	N	10,69
41	ADJUSTING ASPIRATION VALVE WITH CURVE Ø 200 ZINC-PLATED	N	177,68
42	METAL HOSE SECTION Ø 200 L=1500 mm	N	39,44
43A	METAL HOSE SECTION Ø 200 L=100 mm	N	26,54
43B	METAL HOSE SECTION Ø 200 L=600 mm	N	31,32
43C	METAL HOSE SECTION Ø 200 L=1100 mm	N	36,12
44	METAL HOSE SECTION Ø 200 L=1100 mm WITH CURVE	N	143,77
45	METAL HOSE SECTION Ø 200 L=850 mm WITH CURVE	N	125,16
46A	CLAMP Ø 160	N	3,69
46B	CLAMP Ø 200	N	4,06
48	ADJUSTING ASPIRATION VALVE WITH CURVE Ø 160 ZINC-PLATED	N	166,99
49A	CURVE Ø 160 135° ZINC-PLATED	N	87,88
49B	CURVE Ø 120 135° ZINC-PLATED	N	109,65
60	GALVANIZED COMPLETE TUBE Ø 200 FOR SUPER 120	N	549,27

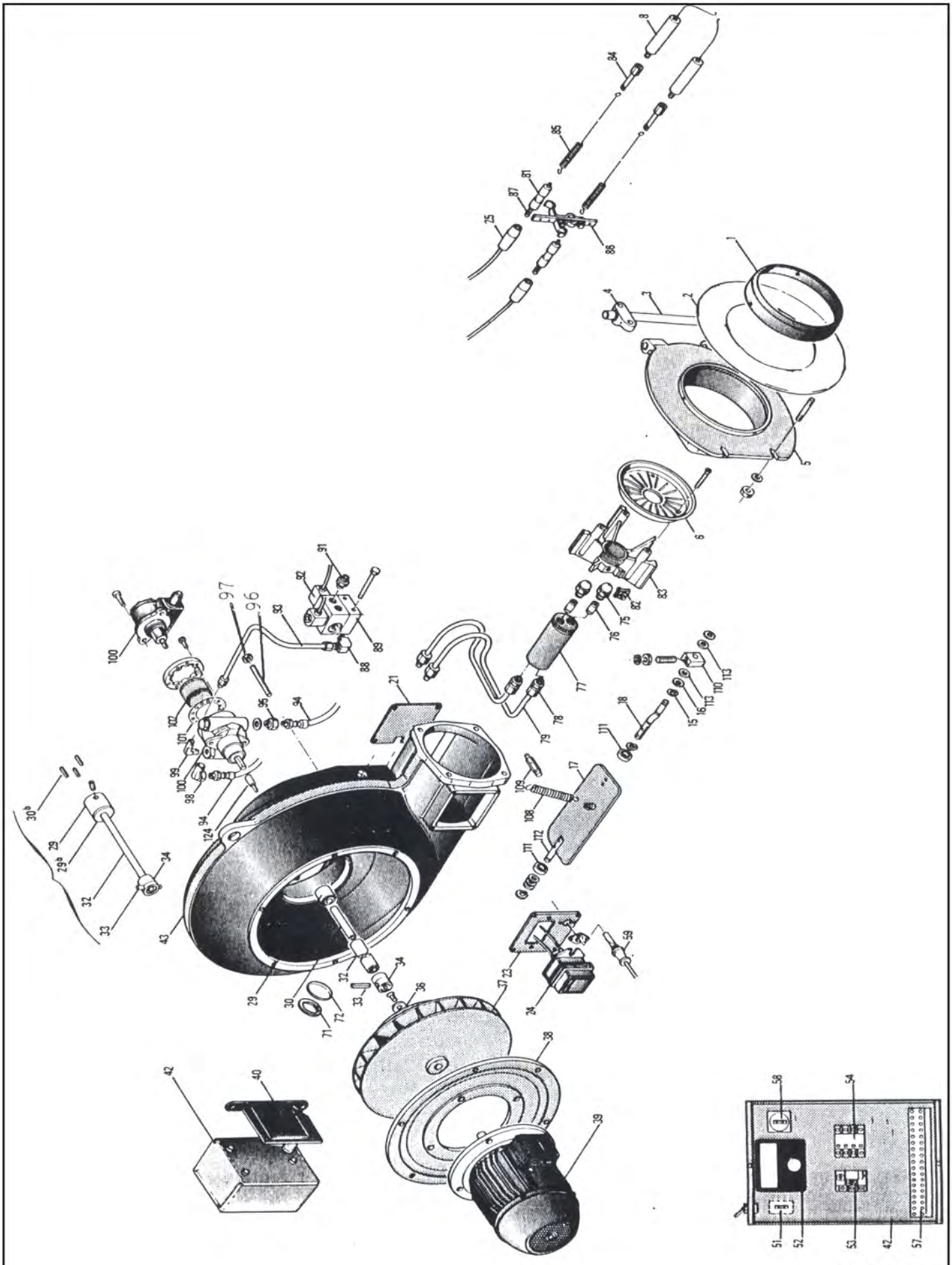

TAV.15

	OLD SUPER/JUNIOR MACHINES CUENOD BURNER PCS 45	JUNIOR-SUPER	TAV. 15
		Foglio 1 di 1	2013

POS	DESCRIPTION	UM	Euro €
1	FRONT FUNNEL	N	
2	FRONT GASKET	N	
3.4	FIXING BRACKETS	N	
5	COMBUSTION HEAD	N	
6	AIR DEFLECTOR	N	
8	ELECTRODS EACH	N	
21	MOVABLE PLATE	N	
23	FIXING PLATE FOR TRANSFORMER AND PHOTOCEL	N	
24	IGNITON TRANSFORMER T16 MC	N	
29.34	COUPLING JOINT COMPLET	N	
32	SPLINED RUBBER SHAFT	N	
37	FAN	N	
38	MOTOR FLANGE	N	
39	ELECTRIC MOTOR	N	
40.42	PROTECTION BOX	N	
43	CASTING	N	
51	SPARE FUSE	N	
52	CONTROL BOX LOA21	N	
52/B	ADAPTOR FROM LA/4 TO LOA21	N	
53	THERMAL RELAY	N	
54	CONTACTOR	N	
57	TERMINAL WIRES-BOARD	N	
58	FUSE HOLDER	N	
59	PHOTOCELL	N	
75	NOZZLE	N	
77	NOZZLE CYLINDER HOLDER	N	
78	CONNECTORS	N	
79	FUEL PIPES	N	
83	CENTRAL CRUISING	N	
86	ELECTRODES LOCK CLAMP	N	
88	CONNECTOR	N	
89	SOLENOIDS HOLDER	N	
91	CONNECTOR	N	
92	SOLENOID ORIGINAL N/A - REPLACING MODEL	N	
93	FUEL PIPE	N	
94	FUEL HOSES EACH	N	
96	AIR ADJUSTING SCREW FOR FIRST FLAME	N	
100	FUEL PUMP SUNTEC AN 67D	N	
102	FUEL PUMP FILTER	N	
108	TENSIONNING SPRING	N	
109	FIXING PIN	N	
110	TERMINAL CAMSHAFT	N	
111	BEARINGS	N	
112	AIR FLAP SHAFT	N	
124	PLASTIC GUIDE	N	
18	CAM SHAFT	N	
25	HT CABLES FOR ELECTRODS C/W TERMINAL	N	
17	AIR FLAP	N	
	NOTA: PRICE NOT REPORTED BECAUSE THE ABOVE PARTS ARE REQUIRED		
	OCCASIONALLY AND VERY RARELY.		
	PLEASE ASK FOR PRICE CONFIRMATION BEFORE TO CONFIRM THE ORDER.		

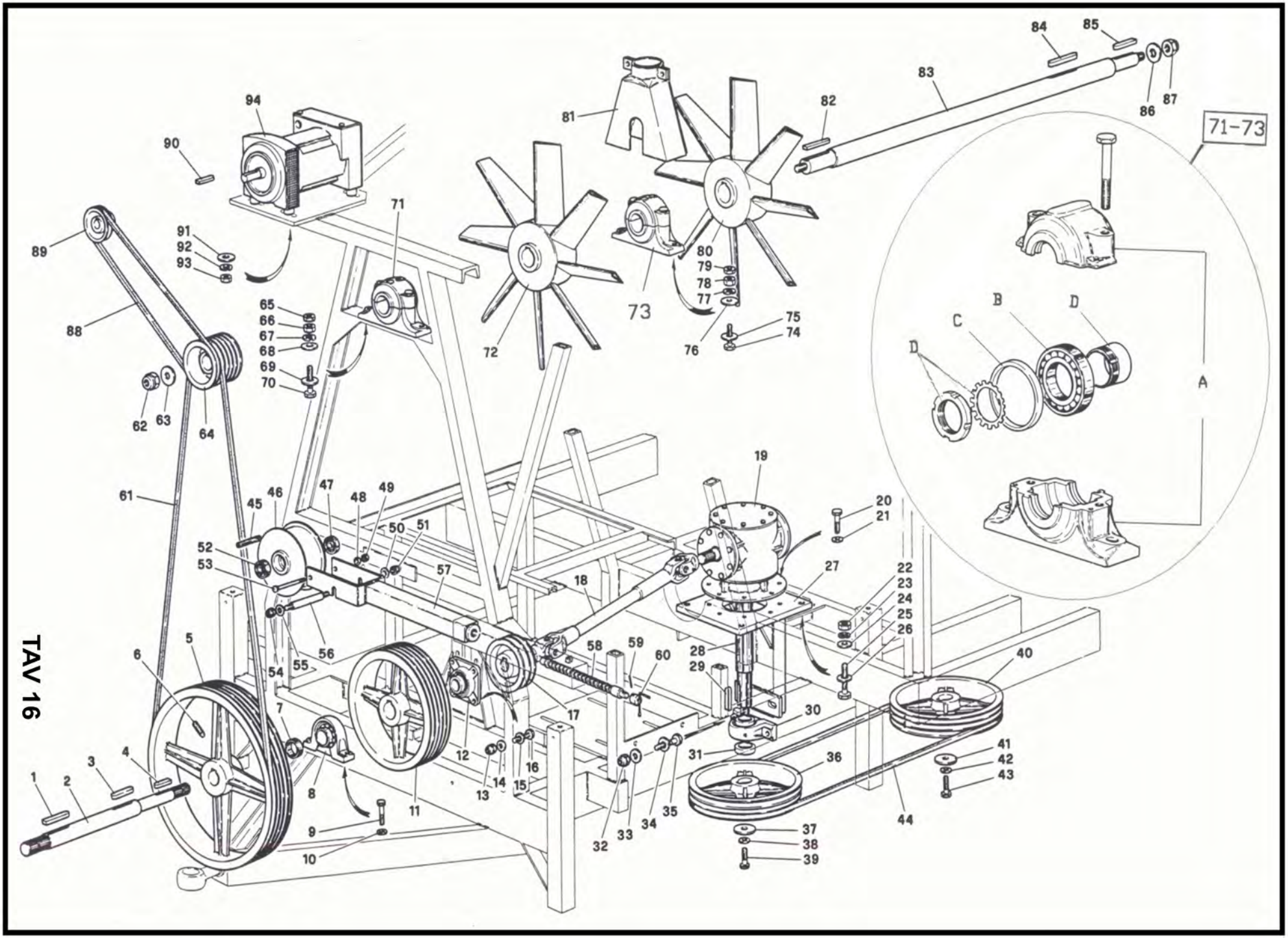
TAV 16
71-73
A
B
C
D
D
73

	OLD SUPER DRIVING OF CENTRE AUGER, FAN AND GENERATOR	JUNIOR-SUPER	TAB. 16
		Sheet 1 of 1	2013

POS	DESCRIPTION	UM	Euro €
1-4	KEY 10X10X90	N	
2	*POWER TAKE OFF SHAFT Ø 50*	N	
3	KEY	N	
5	PULLEY B 600 4 RACES	N	
6	FIXING THREADED PIN 12X30 MA	N	
7	SPACER Ø 40	N	
8	BEARING UCP 210 Ø 50	N	
12	BEARING UCF 208 Ø 40	N	
17	PULLEY C 170 2 RACES	N	
18	INTERMEDIATE CARDAN SHAFT	N	
19	GEARBOX (SEE DETAILS TAB.8)	N	
27	GEARBOX FIXING SUPPORT	N	
28	VERTICAL SHAFT	N	
29	KEY 10X10X50	N	
30	BAERING UCP 210 Ø 50	N	
31	SPACER Ø 50	N	
36	PULLEY B 400 3 RACES	N	
37	ADJUSTING WASHER	N	
40	PULLEY B 400 3 RACES	N	
41	ADJUSTING WASHER	N	
44	BELTS B 112	N	
45	IRON NEEDLE BUSHING	N	
46	ALLUMINIUM TENSION ROLLER	N	
47.52	BEARING 30X62X16 6206 2RS	N	
56	ROLLER PIN	N	
57	TENSION ROLLER GUIDE-ARM (INCLUD. INTO POSS. 58-60)	N	
58.59.60	SCREW AND HANDLE FOR TENSIONNER ARM	N	
61	BELTS B 134	N	
62	SELF LOCKING NUT 20 MB	N	
63	ADJUSTING WASHER Ø 0	N	
64	PULLEY B 118 5 RACES	N	
71-73	BEARING HOUSING SN 511	N	
71A	BODYBEARING SN 511	N	
71B	BEARING	N	
71C	SPACER	N	
71D		N	
72	FRONT FAN	N	
80	REAR FAN	N	
81	FAN SHAFT	N	
82-84-85	KEY 10X10X50	N	
83	FAN SHAFT	N	
87	SELF LOCKING NUT 20 MA	N	
88	BELT B 53	N	
89	PULLEY B 95	N	
94	GENERATOR (SEE DETAILS TAB 12)	N	
	NOTE: PRICE NOT REPORTED BECAUSE THE ABOVE PARTS ARE REQUIRED		
	OCCASIONALLY AND VERY RARELY.		
	PLEASE ASK FOR PRICE CONFIRMATION BEFORE TO CONFIRM THE ORDER.		

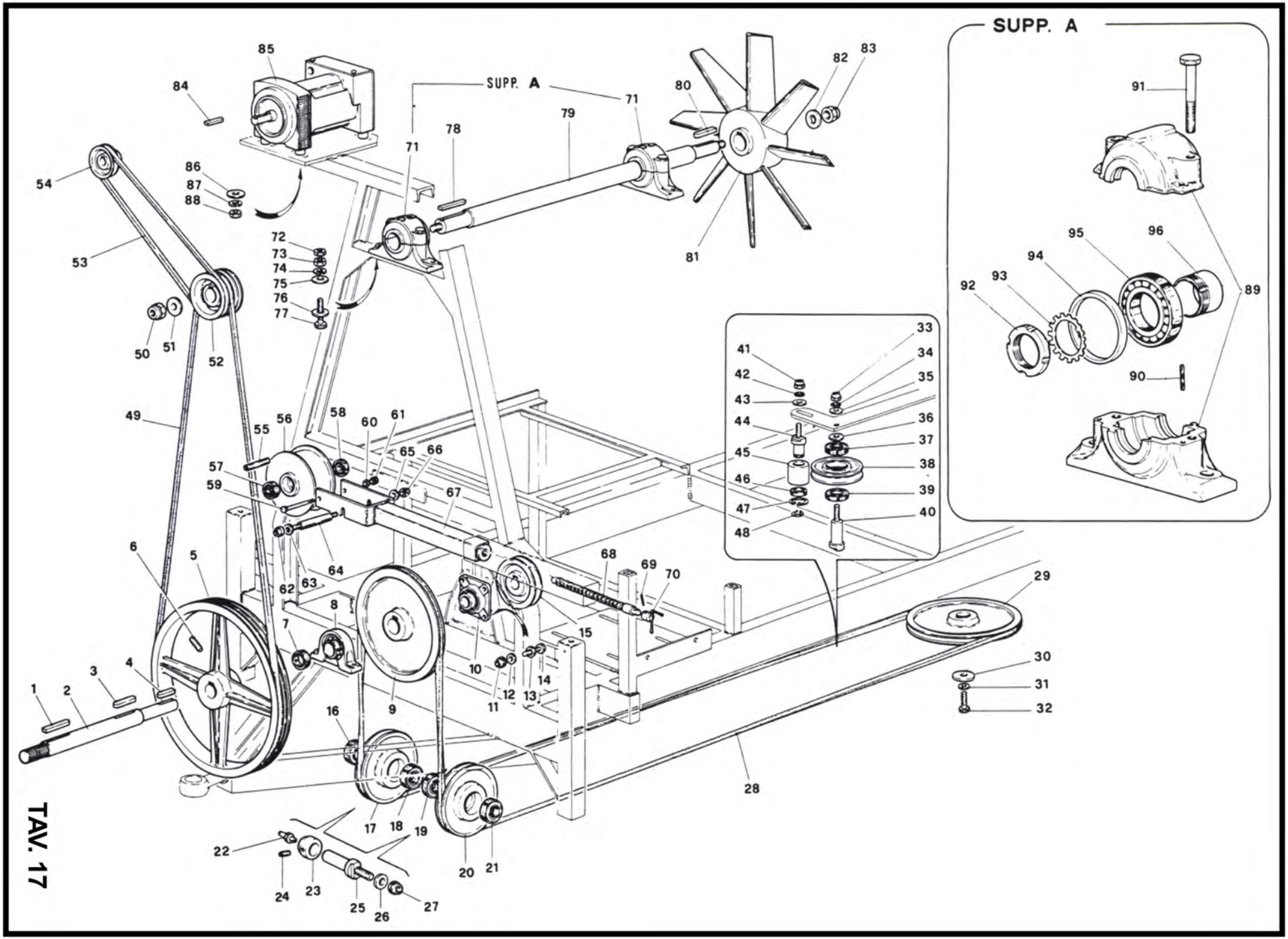
SUPP. A
SUPP. A
TAV. 17

	OLD JUNIOR DRIVING OF CENTRE AUGER, FAN AND GENERATOR	JUNIOR-SUPER	TAB. 17
		Sheet 1 of 1	2013

POS	DESCRIPTION	UM	Euro €
1-4	KEY 10X10X50	N	
2	POWER TAKE 0FF SHAFT Ø 40	N	
3	KEY	N	
5	PULLEY B600 3 RACES	N	
6	FIXING THREADED PIN 12X30 MA	N	
7	SPACER Ø40	N	
8	BEARING UCP 208	N	
9	PULLEY C25O 1 RACE	N	
10	BEARING UCF 208040	N	
15	PULLEY CI7O 1 RACE	N	
16.18.19.21	BEARING 25X52XI5 62005 1Z	N	
17.20	PUL.LEY C 140 1 RACE	N	
23	BUSH	N	
25	PULLEYSHAFT.	N	
28	BELT C 228	N	
29	PULLEY C425 1 RACE	N	
37.39	BEARING 2OX42XI2 6004 2RS	N	
38	PULLEYC 100 1 RACE,	N	
40	PULLEY SHAFT	N	
44	SHAPT FOR GUIDE ROLLER	N	
45	BELT GUIDE ROLLER	N	
46	BEARING 20X42X16 63004 2RS	N	
49	BELTS B 134	N	
52	PULLEY B 118 4 RACES.	N	
53	BELT B 53	N	
54	PULLEY B 95 1 RACE	N	
55	IRON NEEDLE BUSHING	N	
56	ALLUMINIUM TENSION ROLLER	N	
57.58	BEARING 30X62X16 - 6206 2RS	N	
64	ROLLER PIN	N	
67	TENSION ROLLER GUIDE ARM (Includ, pos.s 68-69)	N	
68.69.70	SCREW ANO HANDLE FOR TENSIONNER ARM	N	
71	BEARING HOUSING SN 511	N	
78	KEY 10X10X55	N	
79	FAN SHAFT	N	
80	KEY IOXIOX5O	N	
81	FAN	N	
82	SPACER Ø 2O	N	
83	SELF LOCKING NUT 20MB	N	
85	GENERATOR (See details Tab. 12)	N	
89-90-91	BEARING HOUSING SN 511	N	
92-93-96	KM 11 FIXING NUT	N	
94	BUSH AND LOCKING NUT (INCLUDING ITEM 92).	N	
95	BEARING 55x100x25 - 2221 lck	N	
	NOTE: PRICE NOT REPORTED BECAUSE THE ABOVE PARTS ARE REQUIRED		
	OCCASIONALLY AND VERY RARELY.		
	PLEASE ASK FOR PRICE CONFIRMATION BEFORE TO CONFIRM THE ORDER.		

UNTIL 2002

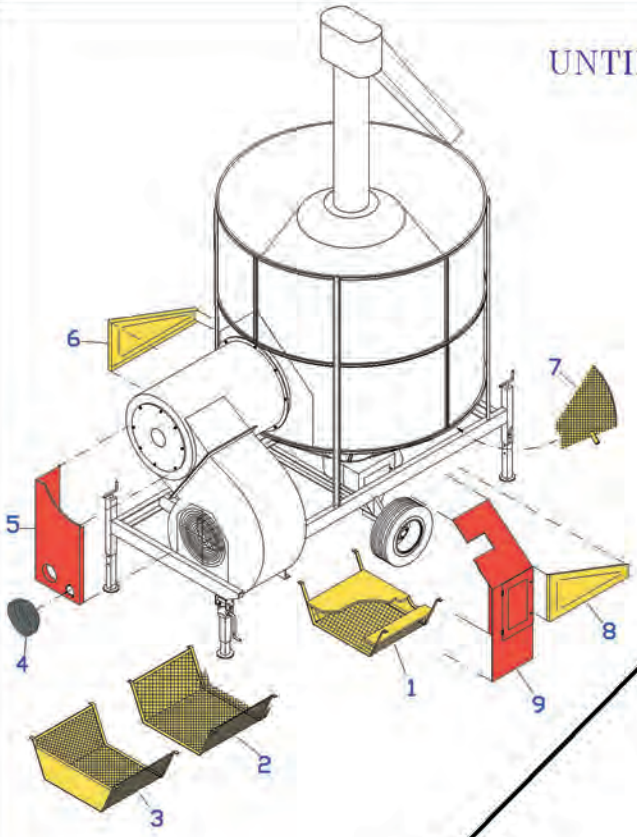

BEGINNING 2003

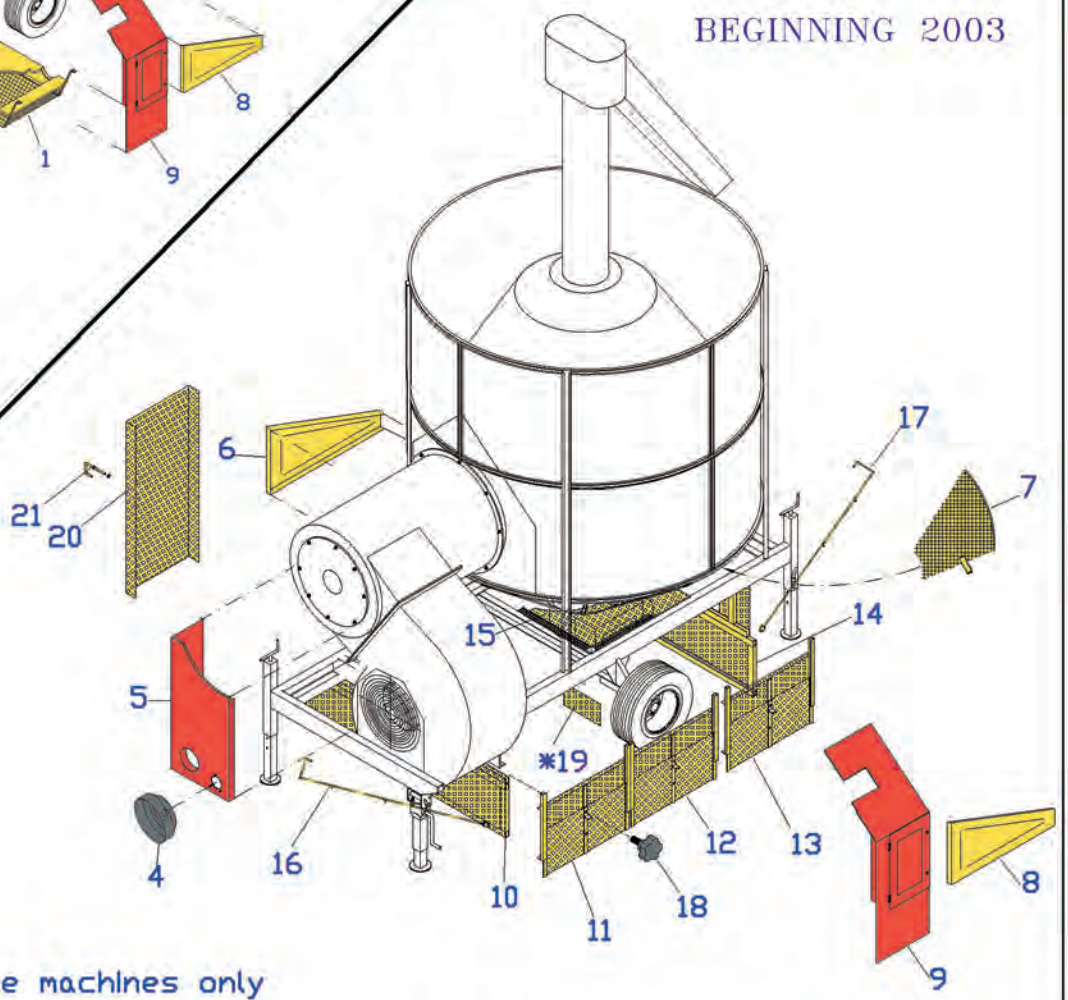

* Twin axle machines only

BEGINNING 2012

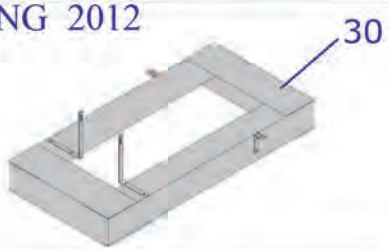

FP PEDROTTI ESSICCATOI

GARDS

TAB 18
2012

	GUARDS	JUNIOR-SUPER	TAB. 18
		Sheet 1 of 1	2013

POS	DESCRIPTION	UM	Euro €
1A	REAR SECTION BOTTOM GUARD (12V - Generator)	N	326,91
1B	REAR SECTION BOTTOM GUARD (Electric)	N	364,22
2A	INTERMEDIATE SECTION BOTTOM GUARD (12V -Generator)	N	174,48
2B	INTERMEDIATE SECTION BOTTOM GUARD (Electric)	N	193,02
3A	FRONT SECTION BOTTOM GUARD (12V-Generator)	N	252,52
3B	FRONT SECTION BOTTOM GUARD (Electric)	N	278,43
4	PTO SHAFT COVER (12V-Generator)	N	27,38
5	FRONT GUARD SUPER-JUNIOR	N	293,81
6-8	TRIANGULAR L/H SIDE GUARD	N	124,05
7	SCREEN GUARD ON INSPECTION DOOR	N	78,40
9A	SIDE GUARD SUPER (12V)	N	434,19
9B	SIDE GUARD JUNIOR (12V)	N	379,45
9C	SIDE GUARD SUPER (Generator)	N	379,45
9D	SIDE GUARD JUNIOR (Generator)	N	382,36
9E	SIDE GUARD SUPER JUNIOR (Electric)	N	206,82
9F	SIDE GUARD SUPER WITH "GPL" BURNER	N	565,19
10	FRONT BOTTOM GUARD	N	185,25
11+12	COMPLETE TWIN SIDE BOTTOM GUARD	N	201,24
11A+12A	FIX TWIN SIDE BOTTOM GUARD	N	89,54
11B-12B	MOBILE SINGLE SIDE BOTTOM GUARD (1 Pcs)	N	50,99
13	COMPLETE SIDE BOTTOM GUARD	N	123,05
13A	FIX SIDE BOTTOM GUARD	N	66,90
13B	MOBILE SIDE BOTTOM GUARD	N	50,99
14	BACK BOTTOM GUARD	N	179,61
15A	LEFT SCREEN FOR BOTTOM CASE	N	31,73
15B	RIGHT SCREEN FOR BOTTOM CASE	N	31,73
16	FRONT LEVER	N	25,43
17	BACK LEVER	N	25,43
18	HANDLE M8	N	4,54
20	LADDER GARD	N	46,77
21	LADDER LOKING SCREW	N	4,58
	Beginning 2012		
30A	BOTTOM GUARD KIT - ELECTRIC DRIVE (NE-S)	N	563,38
30B	BOTTOM GUARD KIT - PTO DRIVE (NE-S)	N	523,23

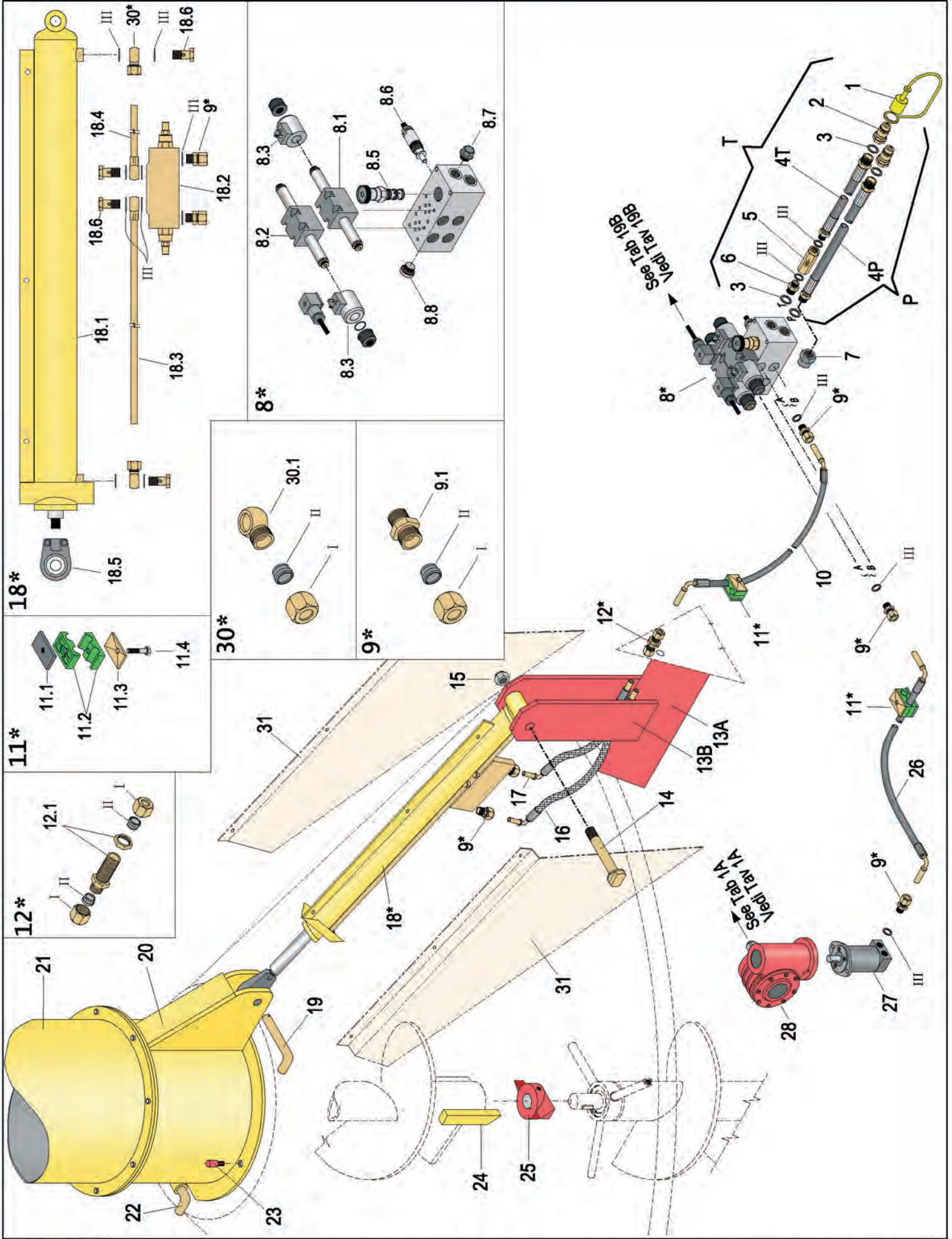
18*
18.1
18.2
18.3
18.4
18.5
18.6
30*
9*
8*
8.1
8.2
8.3
8.5
8.6
8.7
8.8
30*
30.1
9*
9.1
11*
11.1
11.2
11.3
11.4
12*
12.1
T
4T
4P
P
1
2
3
5
6
7
10
11*
12*
13A
13B
14
15
16
17
18*
19
20
21
22
23
24
25
26
27
28
31
See Tab 19B Vedi Tav 19B
See Tab 1A Vedi Tav 1A

	HYDRAULIC SYSTEM TO OPERATE CENTRE AUGER AND TOP SCREEN mechanics parts	JUNIOR-SUPER	TAB. 19 A
		Sheet 1 of 2	2013

POS	DESCRIPTION	UM	Euro €
1A	RED PROTECTION FAST CONNECTOR	N	2,14
1B	YELLOW PROTECTION FAST CONNECTOR	N	2,14
2	FAST CONNECTOR	N	19,65
3	GASKET 1/2 " WITH "OR"	N	0,62
4T	PIPE 3/8" - 1/2" HIGH PRESSURE - RETURN	N	77,82
4P	PIPE 3/8" - 1/2" HIGH PRESSURE - DELIVERY	N	77,82
T	COMPLETE PIPE HIGH PRESSURE WITH VALVE - RETURN	N	158,36
P	COMPLETE PIPE HIGH PRESSURE - DELIVERY	N	119,11
5	CHECK VALVE	N	33,99
6	CONNECTOR 3/8" - 1/2"	N	3,72
7	PLASTIC PLUG 1/2" F	N	4,47
8	DISTRIBUTION UNIT DOUBLE EFFECT COMPLETE	N	1.435,55
8.1	SOLENOID VALVE FOR RAM OF CENTRAL AUGER - AD3E04C	N	297,67
8.2	SOLENOID VALVE FOR ENGINE OF TOP SCREEN - AD3E02C	N	297,67
8.3	COIL OF SOLENOID VALVE	N	54,86
8.5	FLOW CONTROL VALVE	N	507,79
8.6	HIGH-PRESSURE VALVE	N	74,32
8.7	PLASTIC PLUG Ø 1/2"	N	3,72
8.8	MALE PLUG 1/2" WITH GASKET	N	3,40
9	CONNECTOR Ø 3/8" GAS CIL. FOR PIPE Ø 12 COMPLETE	N	4,88
9.1	CONNECTOR Ø 3/8" GAS CIL. FOR PIPE Ø 12	N	3,44
10	PIPE 1/4" R2T L=3170	N	62,14
11	DOUBLE COLLAR Ø 3/8" COMPLETE	N	7,56
11.1	LOWER PLATE TO BE WELDED	N	3,07
11.2	HALF-COLLAR COUPLE	N	3,24
11.3	TOP PLATE	N	1,15
11.4	SCREW M 6X30	N	0,10
12	STRAIGHT THROUGH-SIDEWALL FOR PIPES Ø 12 COMPLETE	N	8,28
12.1	STRAIGHT THROUGH-SIDEWALL FOR PIPES Ø 12	N	3,13
13A	BASE FRAMEWORK FOR FIXING HYDRAULIC RAM	N	45,61
13B	COUPLE OF VERTICAL PLATES FOR FIXING HYDRAULIC RAM	N	46,82
14	BASE PIN FOR HYDRAULIC RAM	N	66,85
15	SELF-LOCKING NUT M20	N	0,90
16	ARMORED PIPE 3/8" R1T L=375	N	61,69
17	ARMORED PIPE 3/8" R1T L=265	N	61,46
18	HYDRAULIC RAM COMPLETE FOR SUPER	N	865,59
18.1	HYDRAULIC RAM FOR SUPER	N	590,47
18.2	STOP AND CONTROLL VALVE OF DOWN STROKE	N	202,11
18.3	LONG PIPE WITH CONNECTOR	N	
18.4	SHORT PIPE WITH CONNECTOR	N	
18.5	WORKHEAD OF TOP FIXING	N	
18,6	DRILLED SCREW	N	
19	TOP ANCHORAGE PIN OF HYDRAULIC RAM	N	34,24
20	BASE STUB PIPE OF EXTENSION PIPE	N	345,70
21	BUBBLE EXTENSION PIPE FOR ROTATING TOP HAT L=2600	N	1.112,68
22	BASE ANCHORAGE PIN FOR EXTENSION PIPE	N	34,24
23	DOWEL PIN	N	12,80
24	DRIWING PLATE PIN	N	10,90
25	DOUBLE BIG DRIVING JACK FOR HYDRAULIC SYSTEM	N	74,20
26	PIPE HIGH PRESSURE 1/4" R1T L=3800	N	62,14
27	HYDRAULIC ENGINE 12 CC	N	404,22

ESSICCATOI

HYDRAULIC SYSTEM TO OPERATE CENTRE AUGER AND TOP SCREEN

TAB. 19A
2006

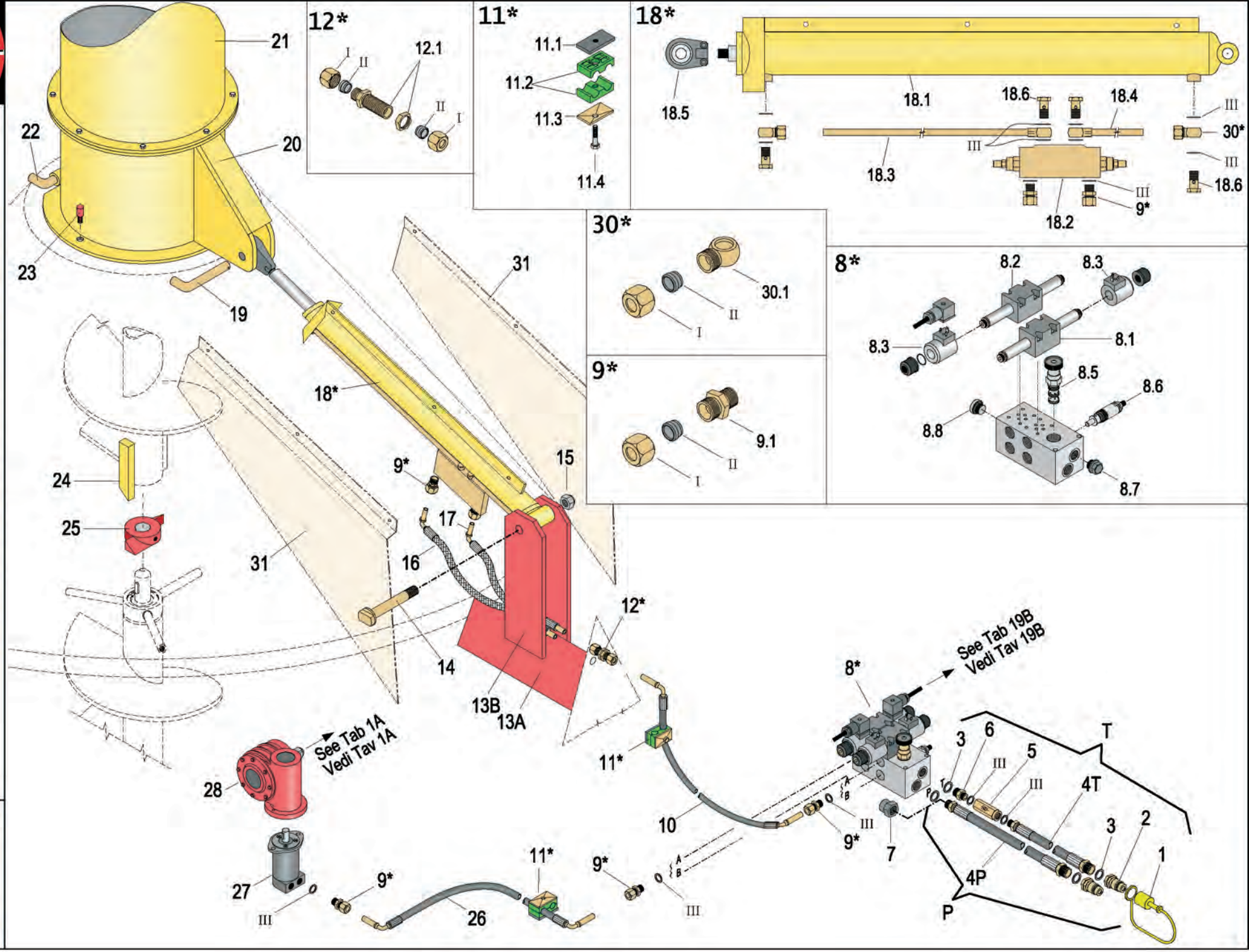

	HYDRAULIC SYSTEM TO OPERATE CENTRE AUGER AND TOP SCREEN mechanics parts	JUNIOR-SUPER Sheet 2 of 2	TAB. 19 A 2013

POS	DESCRIPTION	UM	Euro €
28	REDUCTION GEAR 1:40	N	374,86
30	COMPLETE METAL EYELET CONNECTOR	N	
30.1	METAL EYELET	N	
31	COUPLE OF PROTECTION GUARD FOR HYDRAULIC RAM-PIPE FITTINGS	N	117,53
I	NUT DIN 12 L	N	0,78
II	NOSE DIN 12 L	N	0,66
III	WASHER 3/8" WITH "OR"	N	0,51

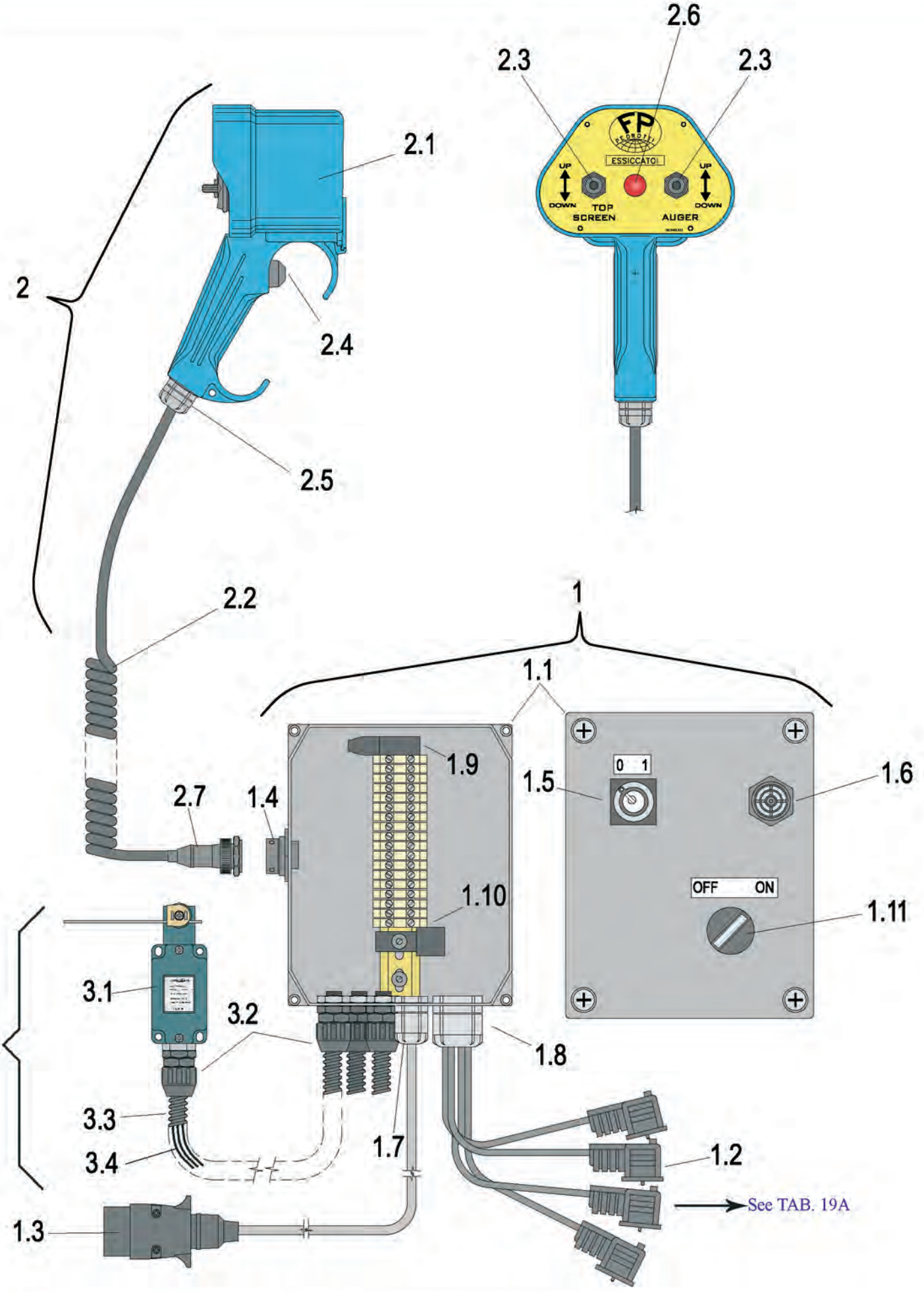
2.6
2.3
2.3
2.1
2
2.4
2.5
UP
DOWN
TOP SCREEN
AUGER
UP
DOWN
ESSICCATOI
2.2
1
1.1
1.9
1.5
0 1
1.6
2.7
1.4
1.10
OFF ON
1.11
3.1
3.2
3
1.8
3.3
3.4
1.7
1.2
1.3
See TAB. 19A

	HYDRAULIC SYSTEM TO OPERATE CENTRE AUGER AND TOP SCREEN electric parts	JUNIOR-SUPER Sheet 1 of 1	TAV. 19 B 2013

POS	DESCRIPTION	UM	Euro €
1	STOP RUN CONTROL PANEL COMPLETE	N	918,73
1.1	ALUMINIUM BOX	N	46,95
1.2	CONNECTOR FOR SOLENOID VALVES	N	15,88
1.3	ELECTRICAL PLUG 7 POLES TO BE CONNECTED TO THE TRACTOR	N	5,25
1.4	SIDE SOCKET 14 POLES F FROM THE CONTROL PANEL WITH COVER	N	37,91
1.5	SELECTOR SWITCH ON-OFF WITH STARTING KEY	N	54,47
1.6	ACOUSTIC BUZZER	N	18,79
1.7	CABLE PRESS PG 11	N	1,05
1.8	CABLE PRESS PG 21	N	1,69
1.9	FUSE 7,5 A	N	2,09
1.10	RELAY 12 V 40/15A	N	10,86
1.11	SELECTOR 2 POSITIONS	N	
2	REMOTE CONTROL UNIT COMPLETE	N	740,65
2.1	CASING OF REMOTE CONTROL UNIT	N	144,72
2.2	SPIRAL CABLE FOR REMOTE CONTROL UNIT	N	76,66
2.3	SWITCH WITH 3 POSITIONS	N	21,41
2.4	BLACK PUSH BUTTO UNDER HANDGRIP OF REMOTE CONTROL UNIT	N	24,09
2.5	CABLE GIUDE PG 13	N	1,31
2.6	RED LIGHT OF REMOTE CONTROL UNIT	N	7,92
2.7	CONNECTOR 14 POLES M MOVABLE	N	19,90
3	STOP RUN COMPLETE WITH CABLES AND SHEATH	N	128,69
3.1	STOP RUN FD 532	N	50,53
3.2	CONNECTOR GLMN 10 PG 7	N	1,78
3.3	SHEATH GL 10	m	1,95
3.4	CABLES 1,5 mm²	m	0,44